molex
one company > a world of innovation

This document was generated on 04/16/2010

PLEASE CHECK WWW.MOLEX.COM FOR LATEST PART INFORMATION

Part Number: 0521471410
Status: Active
Description: 2.00mm (.079") Pitch Wire Trap, Pull-Cover Style, Vertical, 14 Circuits

Documents:

3D Model
Drawing (PDF)
Product Specification PS-52147-001 (PDF)
RoHS Certificate of Compliance (PDF)

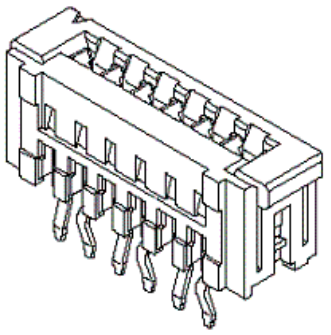

Series image - Reference only

Agency Certification

UL	E29179

General

Product Family	Ribbon Cable / Wire Trap Connectors
Series	52147
Comments	Pull-Cover
Component Type	One Piece
Glow-Wire Compliant	No
Product Name	Board-In, Wire Trap

Physical

Circuits (Loaded)	14
Entry Angle	Vertical
Flammability	94V-0
Lock to Mating Part	None
Material - Metal	Phosphor Bronze
Material - Plating Mating	Tin
Material - Plating Termination	Tin
Number of Rows	1
PCB Retention	Yes
PCB Thickness Recommended (in)	0.062 In
PCB Thickness Recommended (mm)	1.60 mm
Packaging Type	Tray
Pitch - Mating Interface (in)	0.079 In
Pitch - Mating Interface (mm)	2.00 mm
Plating min: Mating (µin)	36
Plating min: Mating (µm)	0.90
Plating min: Termination (µin)	36
Plating min: Termination (µm)	0.90
Polarized to Mating Part	N/A
Polarized to PCB	No
Stackable	No
Surface Mount Compatible (SMC)	No
Temperature Range - Operating	-40°C to +105°C
Termination Interface: Style	Through Hole - Kinked Pin
Wire Insulation Diameter	1.60mm (.063") max.
Wire Size AWG	26
Wire/Cable Type	Ribbon Cable

Electrical

Current - Maximum per Contact	2A
Voltage - Maximum	150V

Material Info

Reference - Drawing Numbers

Product Specification	PS-52147-001, RPS-52147-001, RPS-52147-002, RPS-52147-003, RPS-52147-004

EU RoHS
ELV and RoHS Compliant
REACH SVHC
Contains SVHC: No
Halogen-Free Status
Not Reviewed

China RoHS

Need more information on product environmental compliance?

Email productcompliance@molex.com
For a multiple part number RoHS Certificate of Compliance, click here

Please visit the Contact Us section for any non-product compliance questions.

Search Parts in this Series
52147Series

Mates With
N/A

Use With
Topcoated ribbon cable

This document was generated on 04/16/2010
PLEASE CHECK WWW.MOLEX.COM FOR LATEST PART INFORMATION

DWG. NO. SD-52147-**10

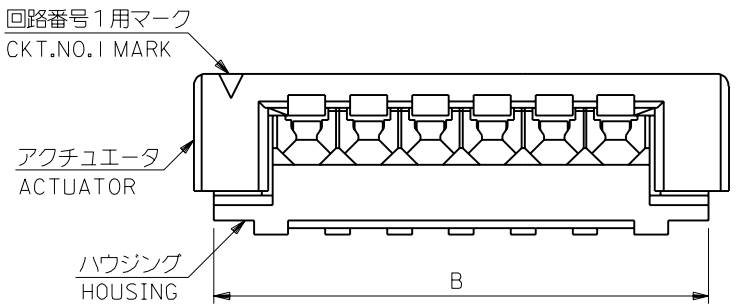

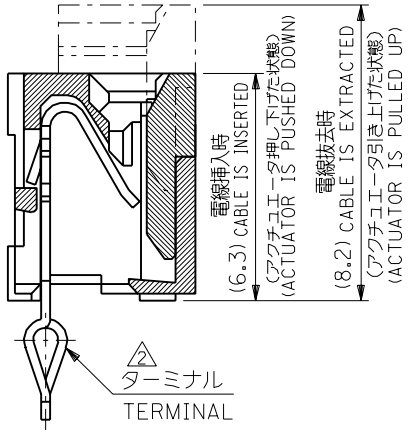

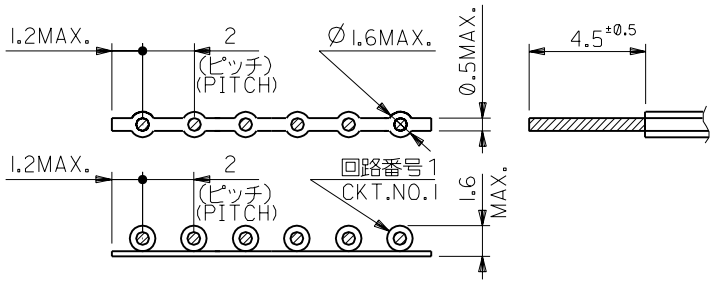

電線適合寸法
APPLICABLE WIRE

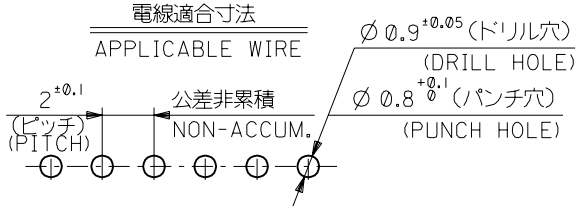

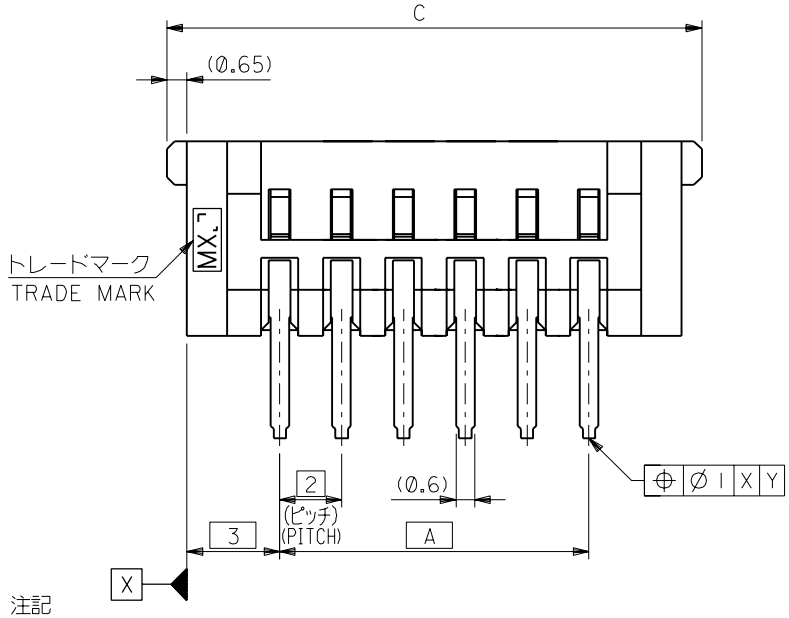

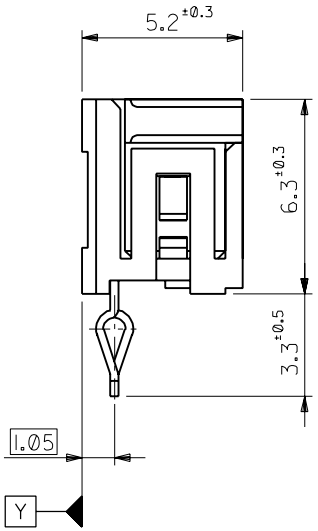

基板取付穴推奨寸法 (t=1.6)
RECOMMENDED P.C.BOARD DIM.

39.3	38	32	52147-1710	17
37.3	36	30	-1610	16
35.3	34	28	-1510	15
33.3	32	26	-1410	14
31.3	30	24	-1310	13
29.3	28	22	-1210	12
27.3	26	20	-1110	11
25.3	24	18	-1010	10
23.3	22	16	-0910	9
21.3	20	14	-0810	8
19.3	18	12	-0710	7
17.3	16	10	-0610	6
15.3	14	8	-0510	5
13.3	12	6	-0410	4
11.3	10	4	-0310	3
9.3	8	2	52147-0210	2
C	B	A	ENG.NO.	極数 CKT.

注記
NOTES

1 使用材料 : MATERIAL
ハウジング : PBT (ガラス繊維入), UL94V-0. (白)
HOUSING : PBT (GLASS FILLED), UL94V-0. (WHITE)
アクチュエータ : PBT (ガラス繊維入), UL94V-0. (白)
ACTUATOR : PBT (GLASS FILLED), UL94V-0. (WHITE)
ターミナル : リン青銅、錫メッキ (t=0.25)
TERMINAL : PHOS-BRO, PRE-TINNED (t=0.25)

△2 2極のみキンク無しとする。
FOR CKT 2 MUST NOT BE KINK

角度 ANGLE	±3°
30 以上 OVER	±0.3
10 以上 30 未満 OVER UNDER	±0.25
10 未満 UNDER	±0.2
一般公差 GENERAL TOLERANCES	

記号 LTR	変更内容 REVISION RECORD	DR. CHK.	日付 DATE
C	再作図&変更 (J40791) REDRAWN & REVISED	T.N H.H	'94/9/28

材料 MATERIAL	注記参照 SEE NOTES
仕上げ FINISH	
適用電線範囲 WIRE RANGE	AWG #26 (錫コート線)(TOP-COAT WIRE)
被覆外径 INS. RANGE	図中参照 SEE DRAWING
DRAWN BY '94/9/28	T.NIITSU
CHK'D BY '94/9/29	Y.M H.HIRAMOTO
APP'D BY '94/9/29	M.FUKUSHIMA
尺度 SCALE	

molex MOLEX-JAPAN CO.,LTD. 日本モレックス株式会社

REVISE ONLY ON CAD SYSTEM

TITLE 名称
2.0 NEW MINI
WIRE TRAP CONN.(ST.)

DWG. NO. SD-52147-**10 REV C

:MM DIMENSIONS IN METRIC DO NOT SCALE DRAWING

THIS DRAWING CONTAINS INFORMATION THAT IS PROPRIETARY TO MOLEX(JAPAN) AND SHOULD NOT BE USED WITHOUT WRITTEN PERMISSION
本図面は日本モレックス (株) の所有する情報を含むもので当社の許可なく複製を禁止する。