This document was generated on 06/04/2010

PLEASE CHECK WWW.MOLEX.COM FOR LATEST PART INFORMATION

Part Number: 0520891919

Status: Active

Overview:

Description: 1.00mm (.039") Pitch FFC/FPC Connector, Through-Hole, Right Angle, Low Profile, ZIF, Top Contact Style Receptacle, 19 Circuits, Lead-free

EU RoHS
ELV and RoHS Compliant
REACH SVHC
Not Reviewed
Halogen-Free Status
Not Reviewed

China RoHS

Need more information on product environmental compliance?

Email productcompliance@molex.com
For a multiple part number RoHS Certificate of Compliance, click here

Please visit the Contact Us section for any non-product compliance questions.

Search Parts in this Series
52089Series

General

Product Family	FFC/FPC Connectors
Series	52089
Overview	ffc_fpc_throughhole
Product Name	N/A

Physical

Circuits (Loaded)	19
Color - Resin	Natural
Contact Position	Top
Durability (mating cycles max)	20
Entry Angle	90° Angle
Mated Height (in)	0.118 In
Mated Height (mm)	3.00 mm
Material - Metal	Phosphor Bronze
Material - Plating Mating	Tin-Bismuth
Material - Plating Termination	Tin-Bismuth
Material - Resin	Nylon, Polyester
Number of Rows	1
Orientation	Right Angle
PC Tail Length (in)	0.079 In
PC Tail Length (mm)	2.00 mm
PCB Retention	None
PCB Thickness Recommended (in)	0.024 In
PCB Thickness Recommended (mm)	0.60 mm
Packaging Type	Tray
Pitch - Mating Interface (in)	0.039 In
Pitch - Mating Interface (mm)	1.00 mm
Plating min: Mating (µin)	40
Plating min: Mating (µm)	1
Plating min: Termination (µin)	40
Plating min: Termination (µm)	1
Polarized to PCB	No
Stackable	No
Surface Mount Compatible (SMC)	No
Temperature Range - Operating	-20°C to +80°C
Termination Interface: Style	Through Hole
Wire/Cable Type	FFC/FPC

Electrical

Current - Maximum per Contact	0.2A, 0.4A, 0.5A
Voltage - Maximum	50V

Material Info

Reference - Drawing Numbers

Packaging Specification	SPK-52089-001
Product Specification	PS-52089-013, RPS-52089-011, RPS-52089-014
Sales Drawing	SD-52089-001

This document was generated on 06/04/2010

PLEASE CHECK WWW.MOLEX.COM FOR LATEST PART INFORMATION

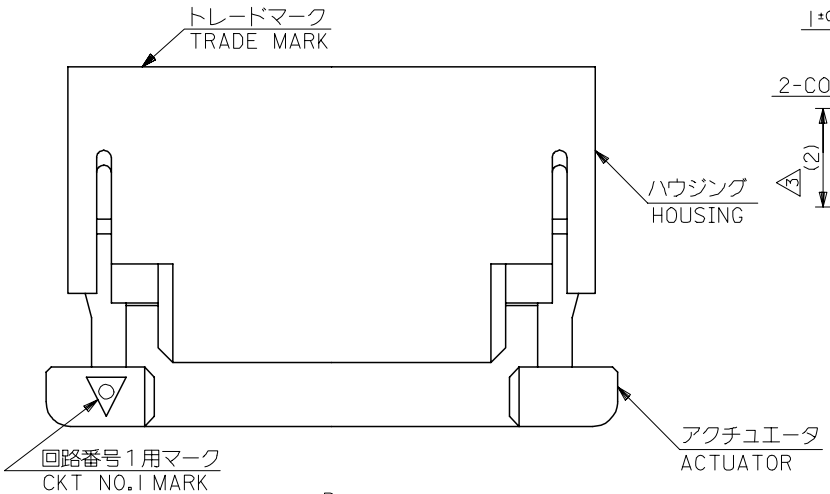

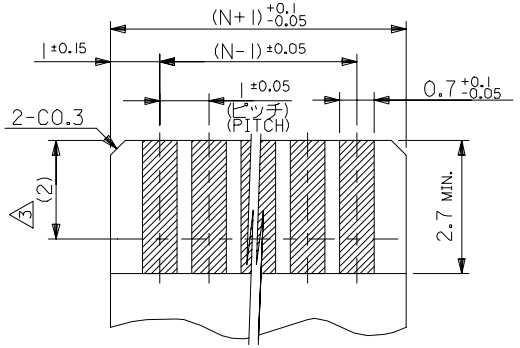

(仕上り厚さ：0．3 ±0.05)
(THICKNESS：0．3 ±0.05)

適合ＦＰＣ推奨寸法
APPLICABLE FPC
RECOMMENDED DIM.

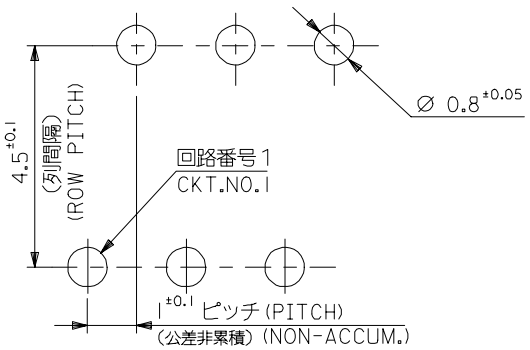

基板取付穴推奨寸法（t＝0．6）（マウント面）
RECOMMENDED P.C.BOARD HOLE DIM
(t=0.6)(MOUNT SURFACE)

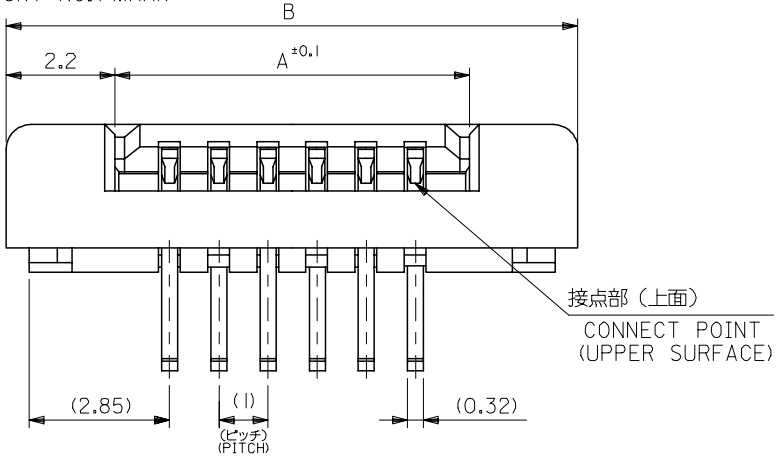

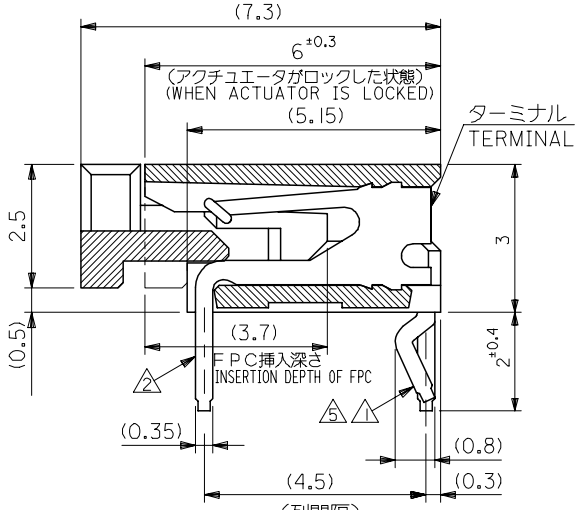

B	A	MATERIAL NO.	極数 CKT.
35.6	31.2	52089-3019	30
34.6	30.2	-2919	29
33.6	29.2	-2819	28
32.6	28.2	-2719	27
31.6	27.2	-2619	26
30.6	26.2	-2519	25
29.6	25.2	-2419	24
28.6	24.2	-2319	23
27.6	23.2	-2219	22
26.6	22.2	-2119	21
25.6	21.2	-2019	20
24.6	20.2	-1919	19
23.6	19.2	-1819	18
22.6	18.2	-1719	17
21.6	17.2	-1619	16
20.6	16.2	-1519	15
19.6	15.2	-1419	14
18.6	14.2	-1319	13
17.6	13.2	-1219	12
16.6	12.2	-1119	11
15.6	11.2	-1019	10
14.6	10.2	-0919	9
13.6	9.2	-0819	8
12.6	8.2	-0719	7
11.6	7.2	-0619	6
10.6	6.2	-0519	5
9.6	5.2	52089-0419	4

注記 NOTES

△1 CKT．NO．1を基準に偶数番目のソルダーテール。
EVEN NUMBER SOLDERTAIL

△2 CKT．NO．1を基準に奇数番目のソルダーテール。
ODD NUMBER SOLDERTAIL

△3 接点部までの嵌合長さ。
LENGTH TO CONTACT POINT.

4．使用材料 MATERIAL
ハウジング ：６６ナイロン，ＵＬ９４Ｖ－０
HOUSING : 66NYLON, UL94V-0
アクチュエータ：ポリエステル，ＵＬ９４Ｖ－０
ACTUATOR : POLYESTER, UL94V-0
ターミナル ：リン青銅，ニッケル下地　錫・ビスマスメッキ
TERMINAL : PHOS-BRO.TIN-BISMUTM OVER NICKEL-PLATED

△5 キンクはソルダーテール△1の両端のみに適用。
KINK APPLIES BOTH SIDE △1 TERMINALS ONLY

6．本製品は　52089-＊＊10　の鉛フリー品である。
THIS PRODUCT IS LEAD FREE OF 52089-**10.

REVISED
EC NO: J2005-0258 2004/07/22
DRWN: SASAMOR 2004/07/22
CHKD: K.TOJO 2004/07/28
APPR: N.UKITA
DESCRIPTION
REV B

GENERAL TOLERANCES (UNLESS SPECIFIED)

10 UNDER	±0.2
10 OVER 30 UNDER	±0.25
30 OVER	±0.3
ANGULAR ±3 °	

DRAFT WHERE APPLICABLE MUST REMAIN WITHIN DIMENSIONS

DIMENSION STYLE	MM ONLY
SCALE	10:1
DESIGN UNITS	METRIC
	THIRD ANGLE PROJECTION
DRAWN BY / DATE	J.SASAMO 2004/7/22
CHECKED BY / DATE	K.TOJO 2004/7/22
APPROVED BY / DATE	N.UKITA 2004/7/22
MATERIAL NO.	52089-＊＊19
TITLE	1.0 FPC CONN ZIF R/A -LEAD FREE-
	MOLEX INCORPORATED
DOCUMENT NO.	SD-52089-001
SHEET NO.	1 OF 1
SIZE	A3

THIS DRAWING CONTAINS INFORMATION THAT IS PROPRIETARY TO MOLEX INCORPORATED AND SHOULD NOT BE USED WITHOUT WRITTEN PERMISSION