520 Series Metric OMNI-BLOK® Molded Base Fuse Block for 5×20mm Fuses

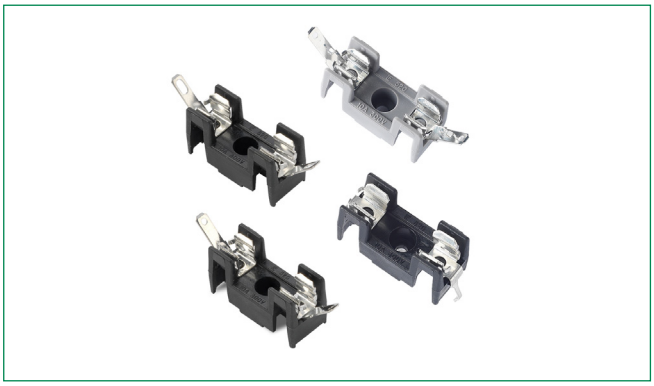

Agency Approval

Agency	Agency File Number
cULus	E14721
CSA	7316
VDE	97121

Product Characteristics

Compatible Fuse Sizes	5×20mm Fuses
Description	The metric Omni-Blok® fuse block, for 5×20mm size fuses, is a low profile design that is available with a choice of solder type terminals, NEMA style QC terminals, or PC board mountable terminals. Each of these designs has tin plated brass terminals. A unique design feature provides self-alignment of the clips to the fuse caps. This feature, plus a one-piece clip/terminal design, assures low contact resistance. An anti-one-piece clip/terminal design, assures low contact resistance. An anti rotation feature is also available on the solder and QC terminal designs.
Electrical	UL/CSA: 10A, 600V VDE: 6.3A, 250V
Dielectric Strength	1500V., Minimum
Clip/Terminals	Tin-Plated Brass
Base	Glass reinforced Thermoplastic. UL 94V0 flammability rating. Gray color (GY) for anti-rotational series, black color for all others.
Ambient Temperature	–40°C to +85°C

Additional Information

Datasheet | **Resources** | **Samples**

© 2021 Littelfuse, Inc.
Specifications are subject to change without notice.
Revised: 06/07/21

Cartridge Fuse Blocks

Fuse Block > 520 Series

Product Dimensions [mm]

Solder Terminals Type (520 004):

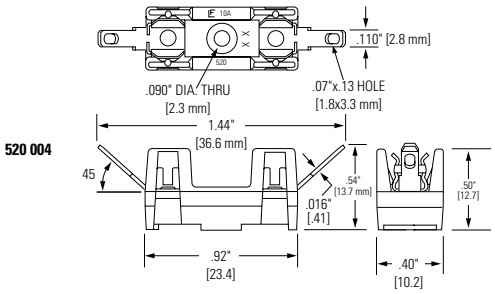

PC Board Mount Type (520 101):

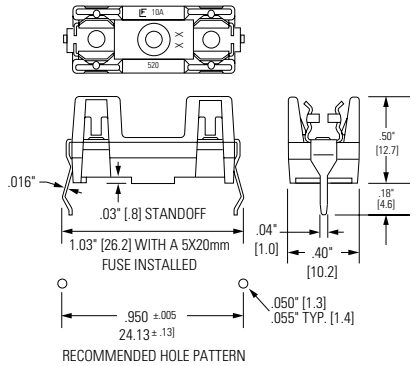

Q.C. Terminals Type (520 003 and 520 005-GY):

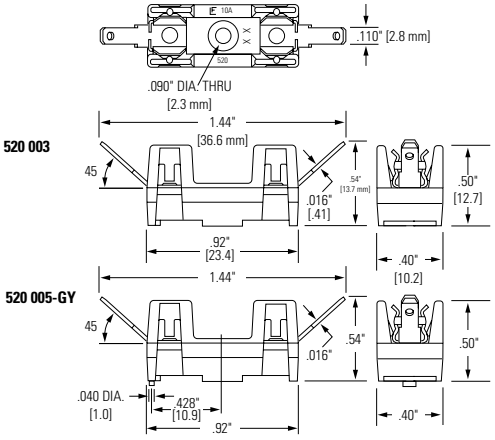

Ordering Information

Ordering PN	Part Number	Clip/Terminal Material	Anti-Rotation Boss	Packing
Solder Terminals Type				
05200004Z	520 004	Brass	No	Bulk starting at 1 piece
Q.C. Terminals (NEMA Style .110") Type				
05200003Z	520 003	Brass	No	Bulk starting at 1 piece
05200005 ZXGY	520 005 GY	Brass	Yes	Bulk starting at 1 piece
PC Board Mount Type				
05200101Z	520 101	Brass	No	Bulk starting at 1 piece

Disclaimer Notice - Information furnished is believed to be accurate and reliable. However, users should independently evaluate the suitability of and test each product selected for their own applications. Littelfuse products are not designed for, and may not be used in, all applications. Read complete Disclaimer Notice at: www.littelfuse.com/disclaimer-electronics.

© 2021 Littelfuse, Inc.
Specifications are subject to change without notice.
Revised: 06/07/21