This document was generated on 06/07/2010

PLEASE CHECK WWW.MOLEX.COM FOR LATEST PART INFORMATION

Part Number: 0513531800
Status: Active
Overview: microclasp
Description: 2.00mm (.079") Pitch MicroClasp™ Wire-to-Board Receptacle Housing, Positive Lock, Dual Row, 18 circuits

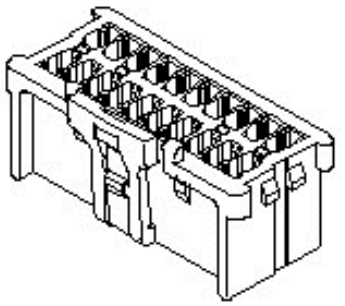

Series image - Reference only

Documents:

- 3D Model
- Drawing (PDF)
- Product Specification PS-51353-003 (PDF)
- Product Specification PS-51353-010 (PDF)
- RoHS Certificate of Compliance (PDF)

Agency Certification

UL	E29179

General

Product Family	Crimp Housings
Series	51353
MolexKits	Yes
Overview	microclasp
Product Name	MicroClasp™

Physical

Circuits (maximum)	18
Color - Resin	White
Flammability	94V-0
Gender	Female
Glow-Wire Compliant	No
Lock to Mating Part	Yes
Material - Resin	Nylon
Number of Rows	2
Packaging Type	Bag
Panel Mount	No
Pitch - Mating Interface (in)	0.079 In
Pitch - Mating Interface (mm)	2.00 mm
Stackable	No
Temperature Range - Operating	-25°C to +85°C

Material Info

Reference - Drawing Numbers

Packaging Specification	SPK-51353-001
Product Specification	PS-51353-003, PS-51353-010, RPS-501844-001, RPS-51353-005, RPS-51353-008, RPS-51353-009, RPS-51353-010, RPS-51353-013, RPS-51353-014, RPS-51353-016, RPS-51353-017, RPS-51353-018, RPS-51353-019, RPS-51353-020, RPS-51353-021, RPS-51353-022, RPS-51353-023, RPS-51353-024, RPS-51353-025, RPS-51353-026, RPS-51353-028, RPS-51353-030
Sales Drawing	SD-51353-002

EU RoHS
ELV and RoHS Compliant
REACH SVHC
Not Reviewed
Halogen-Free Status
Not Reviewed

China RoHS

Need more information on product environmental compliance?

Email productcompliance@molex.com
For a multiple part number RoHS Certificate of Compliance, click here

Please visit the Contact Us section for any non-product compliance questions.

Search Parts in this Series
51353Series

Mates With
55917 Vertical Header with Kinked PC Tails, 55959 Right Angle Header, 501844 Vertical Header

Use With
56134 Terminal

This document was generated on 06/07/2010

PLEASE CHECK WWW.MOLEX.COM FOR LATEST PART INFORMATION

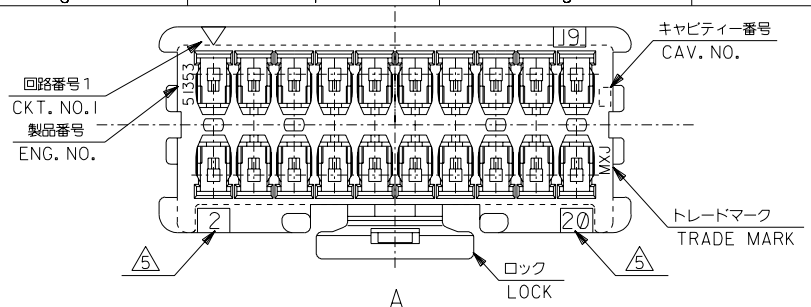

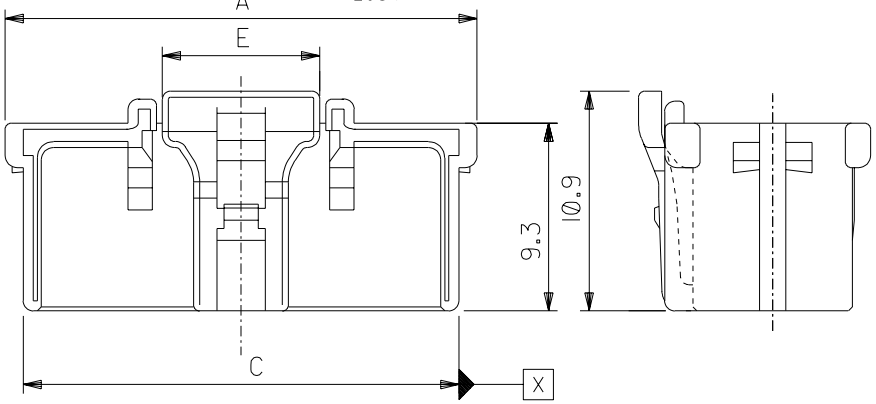

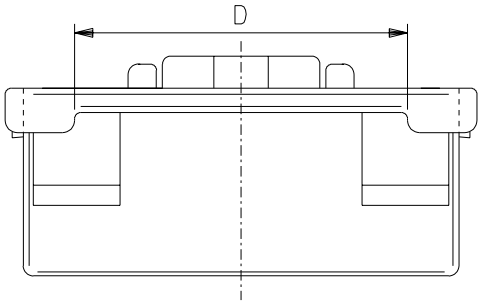

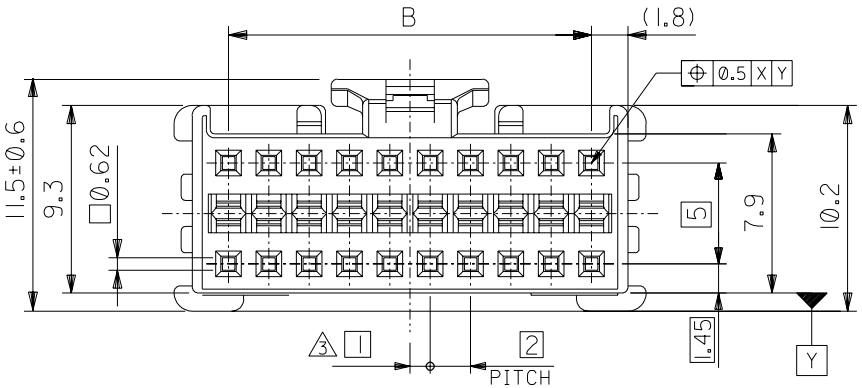

注記
NOTES

1. 適合ターミナル ：56134-9000、9100
APPLICABLE TERMINAL : 56134-9000, 9100

2. 嵌合相手 ：55917、55959シリーズ
MATE WITH : 55917, 55959 SERIES

3. (全極数／2) =偶数の場合に適用。
APPLY FOR (CIRCUIT/2)=EVEN

4. 製品番号
MATERIAL NO. 51353-**0*
極数 CIRCUIT SIZE　色 COLOR

5. ロック側の回路番号表示は、8～14極は無し、16～40極は有り。
LOCK SIDE CKT. NO. DIDN'T INDICATED 8～14CKT,
INDICATE 16～40CKT.

ナチュラル（白） NATURAL(WHITE)	0
黒 BLACK	1
赤 RED	2
黄 YELLOW	3
青 BLUE	4
桃 PINK	5
緑 GREEN	6
茶 BROWN	7
橙 ORANGE	8
紫 VIOLET	9

7.8	36.5	41.6	38	43.4	51353-400*	40
	34.5	39.6	36	41.4	-380*	38
	32.5	37.6	34	39.4	-360*	36
	30.5	35.6	32	37.4	-340*	34
	28.5	33.6	30	35.4	-320*	32
	26.5	31.6	28	33.4	-300*	30
	24.5	29.6	26	31.4	-280*	28
	22.5	27.6	24	29.4	-260*	26
	20.5	25.6	22	27.4	-240*	24
	18.5	23.6	20	25.4	-220*	22
	16.5	21.6	18	23.4	-200*	20
	14.5	19.6	16	21.4	-180*	18
	12.5	17.6	14	19.4	-160*	16
	10.5	15.6	12	17.4	-140*	14
7.8	8.5	13.6	10	15.4	-120*	12
4.7	6.5	11.6	8	13.4	-100*	10
4.7	4.5	9.6	6	11.4	51353-080*	8
E	D	C	B	A	4 MATERIAL NO.	CKT.

DO NOT SCALE DRAWING

REV	DESCRIPTION	EC NO.	DRWN:	CH'K:	APPR:
C	REVISED	J2003-0719	N.ITO '02/10/22	K.ASAKAWA	T.YAMAGUCHI
B	REVISED	J2003-0066	N.ITO '02/07/08	K.ASAKAWA	T.YAMAGUCHI
A	REVISED	J2002-2307	N.ITO '02/03/18	K.ASAKAWA	T.YAMAGUCHI
0	RELEASED	J2002-1196	N.ITO '01/12/17	K.ASAKAWA	T.YAMAGUCHI

MATERIAL 材料: 66NYLON, UL94V-0
FINISH 仕上げ: //
WIRE RANGE 適用電線範囲: //
INS. RANGE 被覆外径: //

GENERAL TOLERANCES: (UNLESS SPECIFIED) 一般公差

10 UNDER 未満	±0.2
10 OVER 以上 30 UNDER 未満	±0.25
30 OVER 以上	±0.3
ANGLE 角度	±3°

51353-**0*	MODEL NO.
SCALE //	DESIGN UNITS ☒mm ☐INCH
THIRD ANGLE PROJECTION	DIMENSIONS: ☐mm/INCH ☐INCH/mm ☒mm ONLY
SHT / REV	REVISE ON CAD ONLY
DRAWN BY & DATE N.ITO '01/12/17	
CHECKED BY & DATE K.ASAKAWA '02/10/22	
APPROVED BY & DATE T.YAMAGUCHI '02/10/22	
CAD FILENAME 51353002.S01	MATERIAL NO. SEE CHART
DRAWING NO. SD-51353-002	SHEET NO. 1 OF 2

TITLE: 2.0mm W-t-B DUAL CONN DIP RCPT HOUSING

molex MOLEX INCORPORATED

THIS DRAWING CONTAINS INFORMATION THAT IS PROPRIETARY TO MOLEX INCORPORATED AND SHOULD NOT BE USED WITHOUT WRITTEN PERMISSION.

SIZE B

EN-02J(097) MXJ-54

DWG. NO. SD-51353-002

51353002.S01

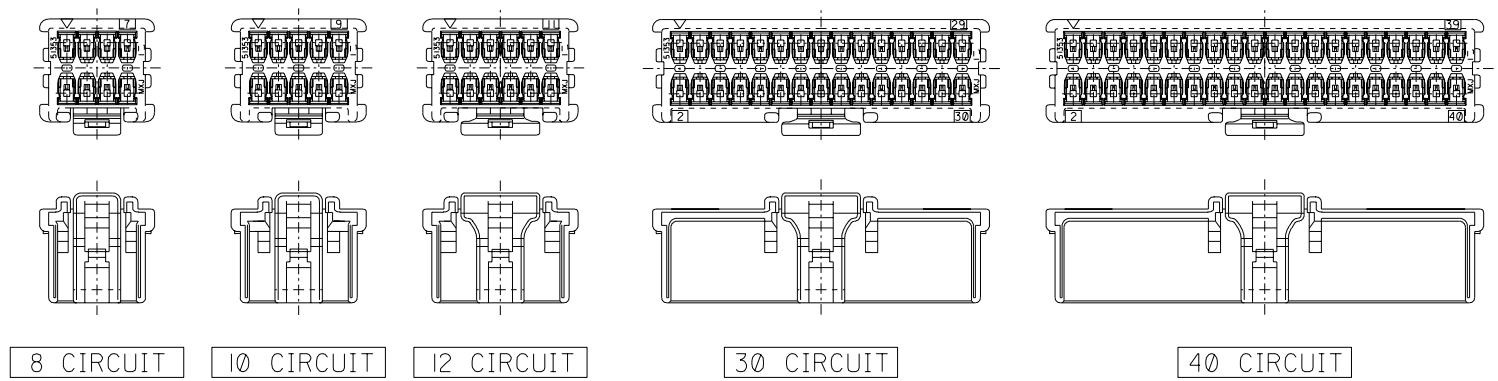

VIEW OF 8,10,12,40 CIRCUIT
(2:1)

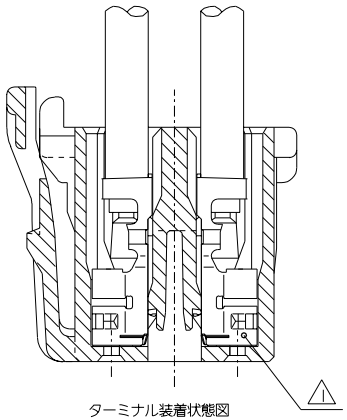

ターミナル装着状態図
TERMINAL ASSEMBLY DRAWING
SCALE 5:1

DWG. NO. SD-51353-002

DO NOT SCALE DRAWING

REV	DESCRIPTION	EC NO.	DRWN	CH'K	APPR
C	REVISED	J2003-0719	N.ITO	K.ASAKAWA	T.YAMAGUCHI
			'02/09/12		
B	REVISED	J2003-0066	N.ITO	K.ASAKAWA	T.YAMAGUCHI
			'02/07/08		
A	REVISED	J2002-2307	N.ITO	K.ASAKAWA	T.YAMAGUCHI
			'02/03/18		
0	RELEASED	J2002-1196	N.ITO	K.ASAKAWA	T.YAMAGUCHI
			'01/12/17		

MATERIAL 材料: SEE CHART 1 OF 2
FINISH 仕上げ: //
WIRE RANGE 適用電線範囲: //
INS. RANGE 被覆外径: //

GENERAL TOLERANCES: (UNLESS SPECIFIED) 一般公差

10 UNDER 未満	±0.2
10 OVER 以上 30 UNDER 未満	±0.25
30 OVER 以上	±0.3
ANGLE 角度	±3°

51353-**0*

SCALE: //
DESIGN UNITS: ☒mm ☐INCH
MODEL NO.
THIRD ANGLE PROJECTION
DIMENSIONS: ☐ mm/INCH ☐ INCH/mm ☒ mm ONLY
SHT | REV: REVISE ON CAD ONLY

DRAWN BY & DATE: N.ITO '01/12/17
CHECKED BY & DATE: K.ASAKAWA '02/09/12
APPROVED BY & DATE: T.YAMAGUCHI '02/09/12

TITLE: 2.0mm W-t-B DUAL CONN DIP RCPT HOUSING

MOLEX INCORPORATED

CAD FILENAME: 51353002.S02
MATERIAL NO.: SEE CHART
DRAWING NO.: SD-51353-002
SHEET NO.: 2 OF 2
SIZE: B

THIS DRAWING CONTAINS INFORMATION THAT IS PROPRIETARY TO MOLEX INCORPORATED AND SHOULD NOT BE USED WITHOUT WRITTEN PERMISSION.

51353002.S02

EN-02J(097) MXJ-54