This document was generated on 03/15/2010

PLEASE CHECK WWW.MOLEX.COM FOR LATEST PART INFORMATION

Part Number: 0513470400

Status: Active

Description: 3.30mm (.130") Pitch Wire-to-Board and Wire-to-Wire Receptacle Housing, Positive Lock, Single Row, 4 Circuits, White

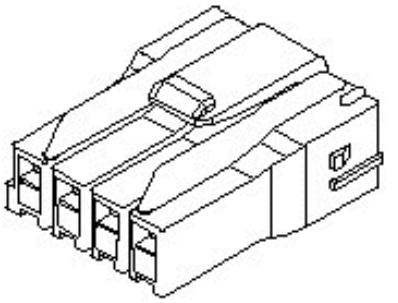

Series image - Reference only

Documents:

Drawing (PDF)
Product Specification PS-51284-001 (PDF)
Product Specification PS-51284-002 (PDF)
RoHS Certificate of Compliance (PDF)

General

Product Family	Crimp Housings
Series	51347
Product Name	N/A

Physical

Circuits (maximum)	4
Color - Resin	Natural
Gender	Female
Glow-Wire Compliant	No
Lock to Mating Part	Yes
Material - Resin	Nylon
Number of Rows	1
Packaging Type	Bag
Panel Mount	No
Pitch - Mating Interface (in)	0.130 In
Pitch - Mating Interface (mm)	3.30 mm
Polarized to Mating Part	Yes
Stackable	No
Temperature Range - Operating	-25°C to +85°C

Electrical

Current - Maximum per Contact	4A

Material Info

Reference - Drawing Numbers

Product Specification	PS-51284-001, PS-51284-002, RPS-51284-003, RPS-51284-004, RPS-51284-005, RPS-51284-006, RPS-51284-007, RPS-51284-008, RPS-51284-009, RPS-51284-011
Sales Drawing	SD-51347-001, SD-51347-002

EU RoHS
ELV and RoHS Compliant
REACH SVHC
Contains SVHC: No
Halogen-Free Status
Halogen-Free

China RoHS

Need more information on product environmental compliance?

Email productcompliance@molex.com
For a multiple part number RoHS Certificate of Compliance, click here

Please visit the Contact Us section for any non-product compliance questions.

Search Parts in this Series
51347Series

Mates With
55883s , 51346-0400

Use With
51348 , 56187

This document was generated on 03/15/2010

PLEASE CHECK WWW.MOLEX.COM FOR LATEST PART INFORMATION

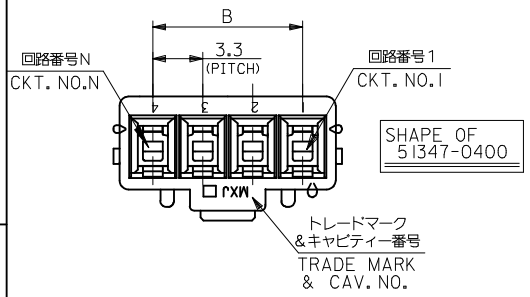

SHAPE OF 51347-0400

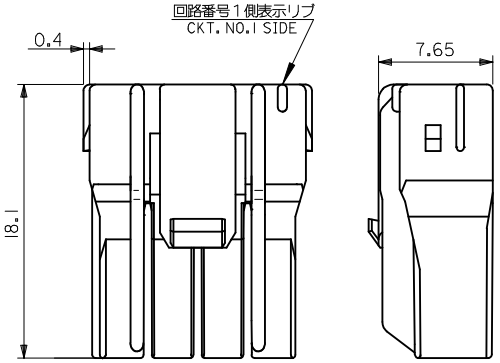

各極形状を下記に参考として示す。
尚、2極及び3極については嵌合間口にて誤嵌合バリエーションを持たせている為組み合わせには注意して下さい。

2極品の形状
SHAPE OF 2 CIRCUITS

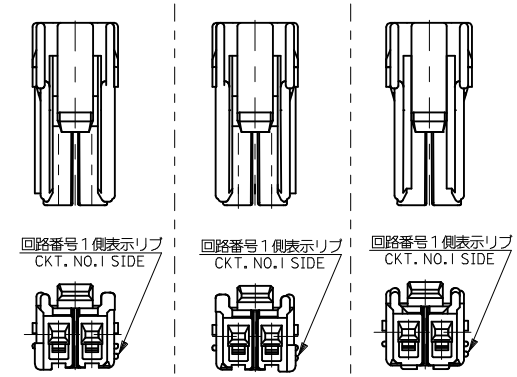

SHAPE OF 51347-0200
SHAPE OF 51347-0212
SHAPE OF 51347-0224

3極品の形状
SHAPE OF 3 CIRCUITS

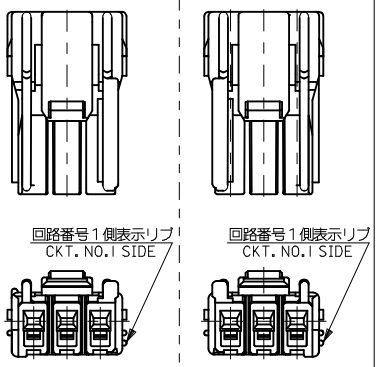

SHAPE OF 51347-0300
SHAPE OF 51347-0312

6極品の形状
SHAPE OF 6 CIRCUITS

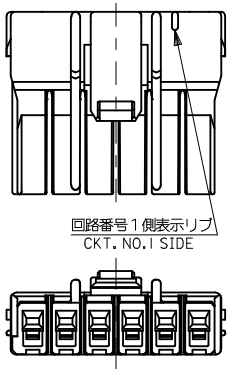

SHAPE OF 51347-0650

8極品の形状
SHAPE OF 8 CIRCUITS

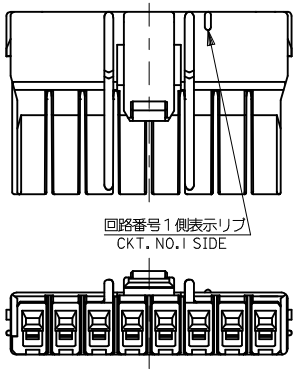

SHAPE OF 51347-0850

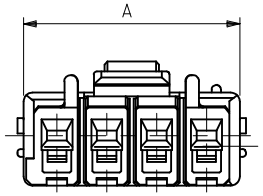

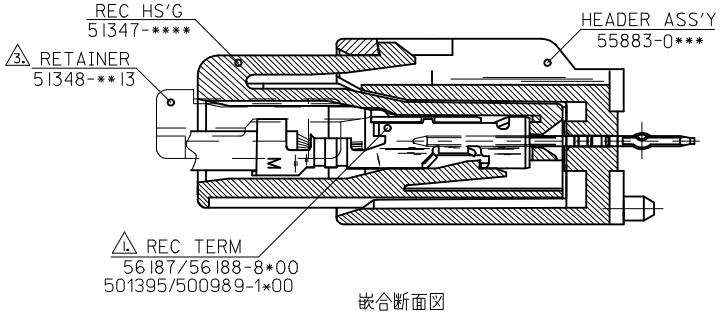

嵌合断面図
MATED CROSS SECTION

注記 NOTES

1. 適合ターミナル : 56187/56188/-8*00,500989-1*00
APPLICABLE TERMINAL
詳細はSD-56187-002/SD-56188-002/SD-500989-002 参照のこと。
REFERENCE:SD-56187-002/SD-56188-002/SD-500989-002

2. 嵌合相手 : 55883-****
MATE WITH
詳細はSD-55883-***参照のこと。
REFERENCE:SD-55883-***

3. 適合リテーナー : 51348-**1*
APPLICABLE RETAINER
詳細はSD-51348-***参照のこと。
REFERENCE:SD-51348-***

4. 材料 : ポリアミド(PA),UL94V-0
MATERIAL : POLYAMIDE(PA),UL94V-0

5. ELV及びRoHS適合品
ELV AND RoHS COMPLIANT

COLOR	B	A	CKT.	MATERIAL NO.	MODEL NO.
NATURAL(IVORY)	23.1	27.5	8	51347-0850	51347-****
NATURAL(IVORY)	16.5	20.9	6	-0650	
NATURAL(IVORY)	9.9	14.3	4	-0400	
RED	6.6	11	3	-0312	
NATURAL(IVORY)	6.6	11		-0300	
BLUE	3.3	7.7	2	-0224	
RED	3.3	7.7		-0212	
NATURAL(IVORY)	3.3	7.7		51347-0200	

MATERIAL 材料	注記参照 SEE NOTES.
FINISH 仕上げ	—#—
WIRE RANGE 適用電線範囲	—#—
INS. RANGE 被覆外径	—#—

REVISED
EC NO: J2010-0432 2009/09/11
DRWN:NYOSHIKAWA 2009/09/14
CHKD:K.ASAKAWA 2009/09/15
APPR:NUKITA
DESCRIPTION
B
REV

GENERAL TOLERANCES (UNLESS SPECIFIED)

10 UNDER	±0.2
10 OVER 30 UNDER	±0.25
30 OVER	±0.3
ANGULAR	±3 °

DRAFT WHERE APPLICABLE MUST REMAIN WITHIN DIMENSIONS

DIMENSION STYLE	MM ONLY
SCALE	---
DESIGN UNITS	METRIC
	THIRD ANGLE PROJECTION
DRAWN BY / DATE	T.ODA 2004/01/15
CHECKED BY / DATE	S.ICHIKAWA
APPROVED BY / DATE	Y.ITO
MATERIAL NO.	SEE CHART
SIZE	A3

TITLE: 3.3 W/B CONN REC HSG

molex MOLEX INCORPORATED

DOCUMENT NO. SD-51347-001

SHEET NO. 1 OF 1

THIS DRAWING CONTAINS INFORMATION THAT IS PROPRIETARY TO MOLEX INCORPORATED AND SHOULD NOT BE USED WITHOUT WRITTEN PERMISSION

本図は2列品を示す
DUAL ROW ASS'Y

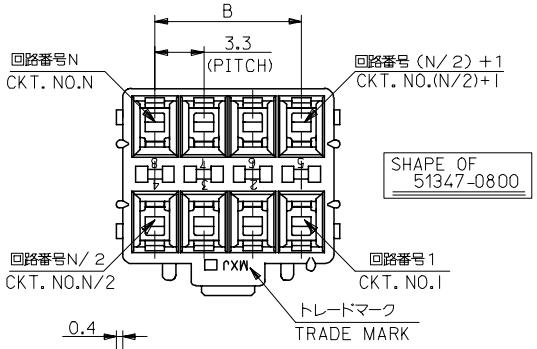

SHAPE OF 51347-0800

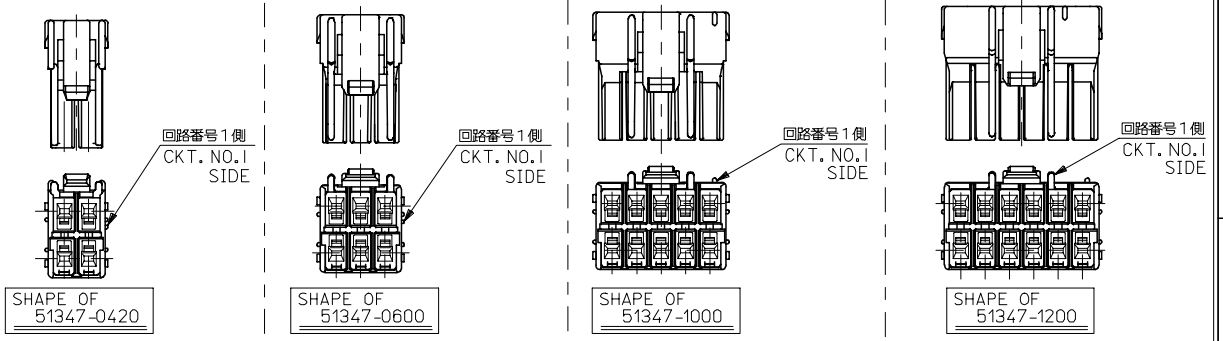

極数レイアウト図
LAYOUT OF EACH CIRCUITS

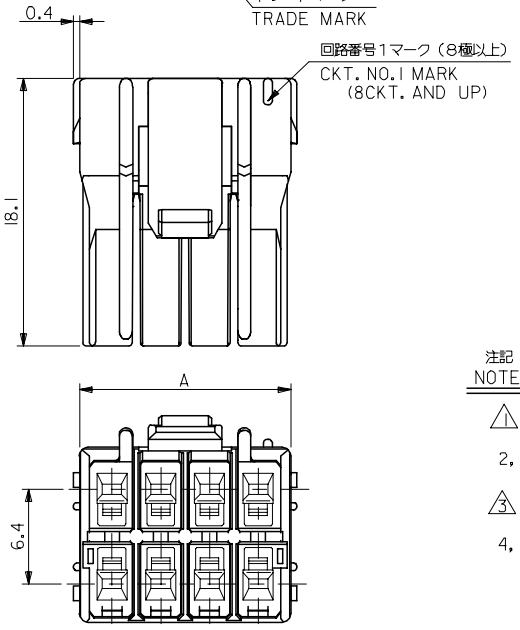

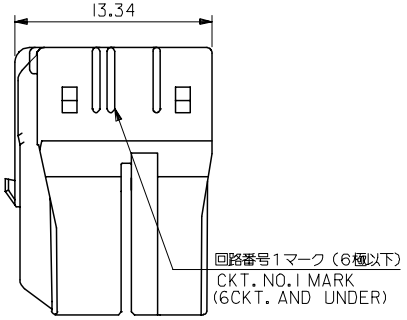

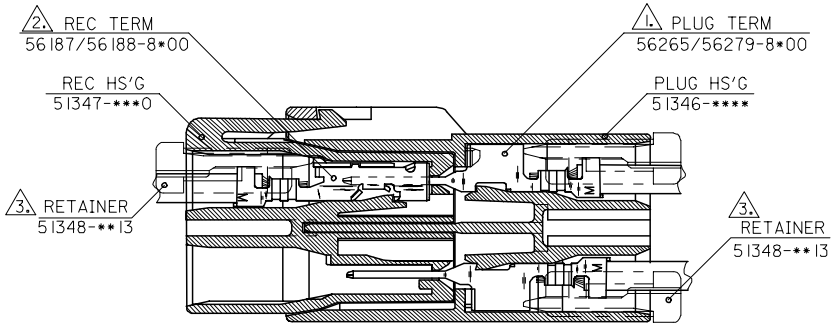

ターミナル装着・嵌合状態図
TERMINAL ASSEMBLY & MATING CONDITION

注記
NOTES

1. 適合ターミナル：56187/56188シリーズ
APPLICABLE TERMINAL : 56187/56188 SERIES
2. 嵌合相手 ： 51346シリーズ
MATE WITH : 51346 SERIES
3. 適合リテーナー ： 51348-**1* シリーズ
APPLICABLE RETAINER : 51348-**1* SERIES
4. 材質 ：NYLON66, UL94V-0

MATE WITH	CONFORMABLE-RETAINER	COLOR	B	A	CKT.	MATERIAL NO.	MODEL NO.
51346-1200	51348-0613	NATURAL	16.5	20.9	12	51347-1200	51347-****
-1000	-0513		13.2	17.6	10	-1000	
-0800	-0413		9.9	14.3	8	-0800	
-0600	-0313		6.6	11	6	-0600	
51346-0420	51348-0213	NATURAL	3.3	7.7	4	51347-0420	

REVISED
EC NO: J2008-1833 2007/11/16
DRWN:MNABEI 2007/11/19
CHKD:THARUYAMA
APPR:NUKITA 2007/11/20
DESCRIPTION
REV A

GENERAL TOLERANCES (UNLESS SPECIFIED)

10 UNDER	±0.2
10 OVER 30 UNDER	±0.25
30 OVER	±0.3
ANGULAR ±3 °	

DRAFT WHERE APPLICABLE MUST REMAIN WITHIN DIMENSIONS

DIMENSION STYLE: MM ONLY
SCALE: ---
DESIGN UNITS: METRIC
THIRD ANGLE PROJECTION

DRAWN BY: T.ODA DATE: '04/01/15
CHECKED BY: S.ICHIKAWA DATE:
APPROVED BY: Y.ITO DATE:
MATERIAL NO.: SEE TABLE

TITLE: 3.3 W/W CONN REC HS'G

molex MOLEX INCORPORATED

DOCUMENT NO.: SD-51347-002
SHEET NO.: 1 OF 2
SIZE: A3

THIS DRAWING CONTAINS INFORMATION THAT IS PROPRIETARY TO MOLEX INCORPORATED AND SHOULD NOT BE USED WITHOUT WRITTEN PERMISSION

本図は１列品を示す
SINGLE ROW ASS'Y

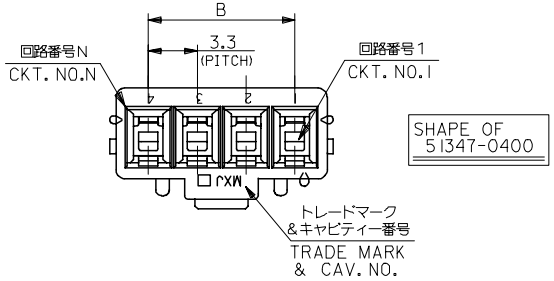

SHAPE OF
51347-0400

各極形状を下記に参考として示す。
尚、２極及び３極については嵌合間口にて誤嵌合バリエーションを持たせている為組み合わせには注意して下さい。

２極品の形状
SHAPE OF 2 CIRCUITS

３極品の形状
SHAPE OF 3 CIRCUITS

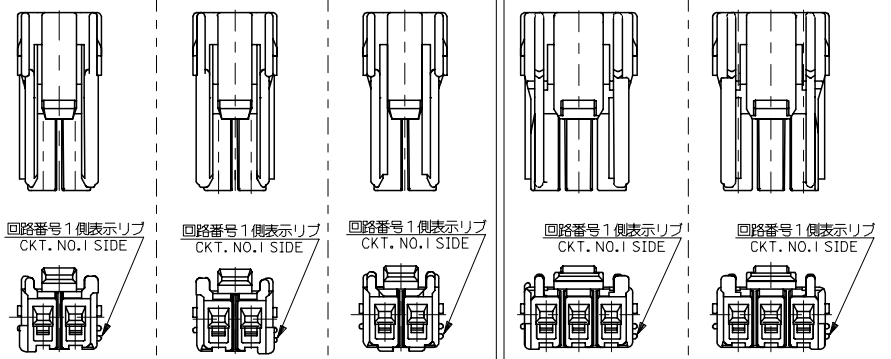

SHAPE OF 51347-0200 | SHAPE OF 51347-0212 | SHAPE OF 51347-0224 | SHAPE OF 51347-0300 | SHAPE OF 51347-0312

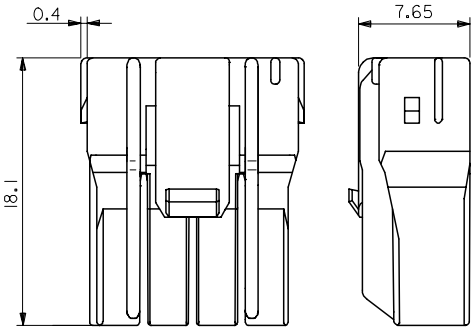

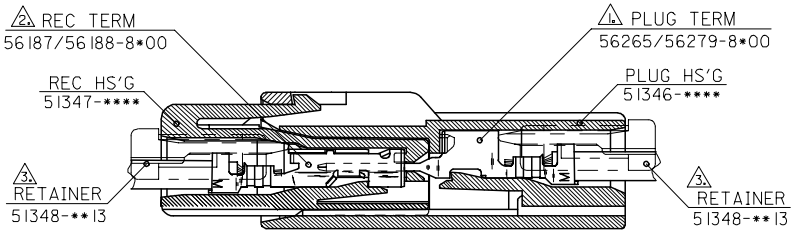

ターミナル装着・嵌合状態図
TERMINAL ASSEMBLY & MATING CONDITION

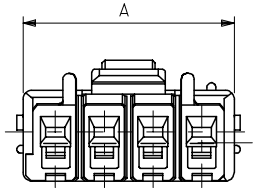

注記 NOTES

1. 適合ターミナル : 56265/56279-8*00
APPLICABLE TERMINAL
詳細はSD-56265-001/SD-56279-001参照のこと。
REFERENCE:SD-56265-001/SD-56279-001

2. 適合ターミナル : 56187/56188-8*00
APPLICABLE TERMINAL
詳細はSD-56187-002/SD-56188-002参照のこと。
REFERENCE: SD-56187-002/SD-56188-002

3. 適合リテーナー : 51348-**13
APPLICABLE RETAINER
詳細はSD-51348-***参照のこと。
REFERENCE:SD-51348-***

4, 材料 MATERIAL : NYLON66, UL94V-0

MATE WITH	CONFORMABLE-RETAINER	COLOR	B	A	CKT.	MATERIAL NO.	MODEL NO.
51346-0400	51348-0413	NATURAL	9.9	14.3	4	51347-0400	51347-****
-0312	-0313	RED	6.6	11	3	-0312	
-0300	-0313	NATURAL	6.6	11		-0300	
-0224	-0213	BLUE	3.3	7.7	2	-0224	
-0212	-0213	RED	3.3	7.7		-0212	
51346-0200	51348-0213	NATURAL	3.3	7.7		51347-0200	

REVISED
EC NO: J2008-1833 2007/11/16
DRWN:MNABEI 2007/11/19
CHKD:THARUYAMA
APPR:NUKITA 2007/11/20
DESCRIPTION
REV A

GENERAL TOLERANCES (UNLESS SPECIFIED)

10 UNDER	±0.2
10 OVER 30 UNDER	±0.25
30 OVER	±0.3
ANGULAR ±3 °	

DRAFT WHERE APPLICABLE MUST REMAIN WITHIN DIMENSIONS

DIMENSION STYLE: MM ONLY
SCALE: ---
DESIGN UNITS: METRIC
THIRD ANGLE PROJECTION

DRAWN BY: T.ODA DATE: '04/01/15
CHECKED BY: S.ICHIKAWA DATE:
APPROVED BY: Y.ITO DATE:
MATERIAL NO.: SEE TABLE

TITLE: 3.3W/W CONN REC HS'G

molex MOLEX INCORPORATED

DOCUMENT NO.: SD-51347-002
SHEET NO.: 2 OF 2

SIZE A3

THIS DRAWING CONTAINS INFORMATION THAT IS PROPRIETARY TO MOLEX INCORPORATED AND SHOULD NOT BE USED WITHOUT WRITTEN PERMISSION