molex
one company > a world of innovation

This document was generated on 04/16/2010

**PLEASE CHECK WWW.MOLEX.COM FOR LATEST PART INFORMATION**

**Part Number:** 0513360410

**Status:** Active

**Description:** 1.25mm (.049") Pitch Mini Mi II™ System Wire-to-Board IDT Housing, Single Row, 4 Circuits

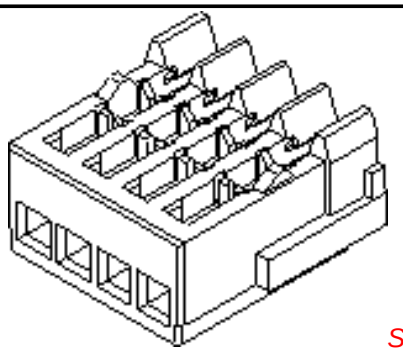

*Series image - Reference only*

**Documents:**

3D Model
Drawing (PDF)
Product Specification PS-51336-010 (PDF)
RoHS Certificate of Compliance (PDF)

## General

| | |
|---|---|
| Product Family | IDT and Solder Connectors |
| Series | 51336 |
| Crimp Quality Equipment | Yes |
| Product Name | Mini Mi II™ |

## Physical

| | |
|---|---|
| Circuits (Loaded) | 4 |
| Color - Resin | Natural |
| Durability (mating cycles max) | 30 |
| Gender | Female |
| Glow-Wire Compliant | No |
| Lock to Mating Part | Yes |
| Material - Metal | Phosphor Bronze |
| Material - Plating Mating | Tin |
| Material - Plating Termination | Tin |
| Material - Resin | Polyester |
| Number of Rows | 1 |
| Packaging Type | Bag |
| Panel Mount | No |
| Pitch - Mating Interface (in) | 0.049 In |
| Pitch - Mating Interface (mm) | 1.25 mm |
| Plating min: Mating (µin) | 36 |
| Plating min: Mating (µm) | 0.90 |
| Plating min: Termination (µin) | 36 |
| Plating min: Termination (µm) | 0.90 |
| Polarized to Mating Part | Yes |
| Stackable | No |
| Temperature Range - Operating | -40°C to +105°C |
| Termination Interface: Style | IDT or Pierce |
| Wire Insulation Diameter | 0.80-0.90mm (.031-.035") |
| Wire Size AWG | 26, 28 |

## Electrical

| | |
|---|---|
| Current - Maximum per Contact | 1.5A |
| Voltage - Maximum | 100V |

## Material Info

## Reference - Drawing Numbers

| | |
|---|---|
| Product Specification | PS-51336-010, RPS-51336-004, RPS-51336-005, RPS-51336-006, RPS-51336-009 |
| Sales Drawing | SD-51336-001 |

**EU RoHS**
**ELV and RoHS Compliant**
**REACH SVHC**
Not Reviewed
**Halogen-Free Status**
**Not Reviewed**

**China RoHS**

**Need more information on product environmental compliance?**

Email productcompliance@molex.com
For a multiple part number RoHS Certificate of Compliance, click here

Please visit the Contact Us section for any non-product compliance questions.

**Search Parts in this Series**
51336Series

**Mates With**
55447 Vertical Header, 55454 Right Angle Header

This document was generated on 04/16/2010

**PLEASE CHECK WWW.MOLEX.COM FOR LATEST PART INFORMATION**

| 番号 NO. | 名称 NAME | 原料 MATERIAL | 数量 QT'Y | 仕上げ FINISH |
|---|---|---|---|---|
| ① | ハウジング HOUSING | PBT PBT | 1 | ガラス30%, UL94V-0 G.F.30% |
| ② | ターミナル TERMINAL | りん青銅 (t=0.2) PHOSPHOR BRONZE(t=0.2) | N | 全体錫メッキ PRE-TINNED |

注) NOTES

1. 原料および仕上げ：表参照
   MATERIAL AND FINISH : SEE CHART

△2. 製品番号
MATERIAL NO.
51336-**1*
- 極数 CIRCUIT SIZE(02 ～ 20)
- 色 COLOR 10: 白色 WHITE

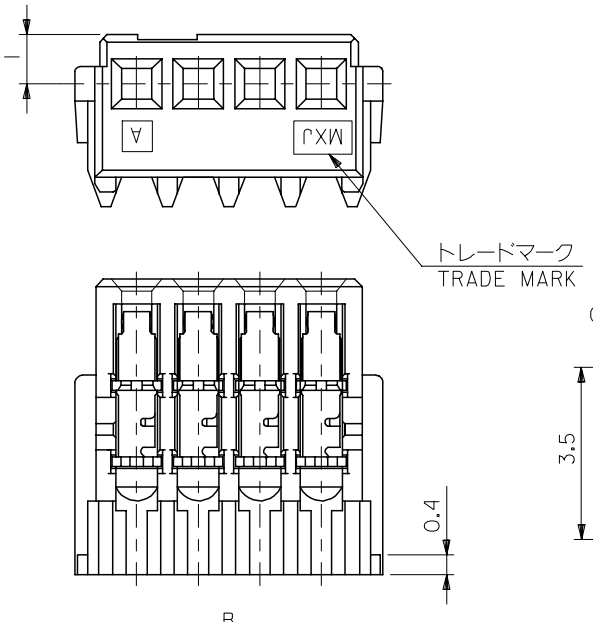


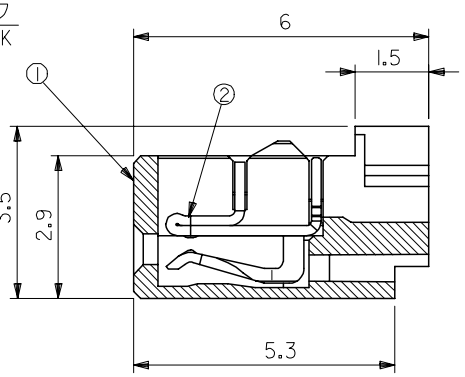


SECTION X-X

| B | A | 極数 CIRCUIT SIZE | △2. 製品番号 MATERIAL NO. | MODEL NO. |
|---|---|---|---|---|
| 26.25 | 23.75 | 20 | 51336-201* | 51336-**1* |
| 25 | 22.5 | 19 | 51336-191* | |
| 23.75 | 21.25 | 18 | 51336-181* | |
| 22.5 | 20 | 17 | 51336-171* | |
| 21.25 | 18.75 | 16 | 51336-161* | |
| 20 | 17.5 | 15 | 51336-151* | |
| 18.75 | 16.25 | 14 | 51336-141* | |
| 17.5 | 15 | 13 | 51336-131* | |
| 16.25 | 13.75 | 12 | 51336-121* | |
| 15 | 12.5 | 11 | 51336-111* | |
| 13.75 | 11.25 | 10 | 51336-101* | |
| 12.5 | 10 | 9 | 51336-091* | |
| 11.25 | 8.75 | 8 | 51336-081* | |
| 10 | 7.5 | 7 | 51336-071* | |
| 8.75 | 6.25 | 6 | 51336-061* | |
| 7.5 | 5 | 5 | 51336-051* | |
| 6.25 | 3.75 | 4 | 51336-041* | |
| 5 | 2.5 | 3 | 51336-031* | |
| 3.75 | 1.25 | 2 | 51336-021* | |

| 材料 MATERIAL | SEE CHART |
|---|---|
| 仕上げ FINISH | SEE CHART |
| 適用電線範囲 WIRE RANGE | AWG #26, #28 |
| 被覆外径 INS. RANGE | ∅0.8 ~ ∅0.9 |

RELEASED
EC NO: J2006-1346
DRWN:MNABEI 2005/11/25
CHKD:KTOYODA 2005/11/28
APPR:NUKITA 2005/11/30
DESCRIPTION
REV 0

GENERAL TOLERANCES (UNLESS SPECIFIED)

| | |
|---|---|
| 10 UNDER | ±0.2 |
| 10 OVER 30 UNDER | ±0.25 |
| 30 OVER | ±0.3 |
| ANGULAR | ±3 ° |

DRAFT WHERE APPLICABLE MUST REMAIN WITHIN DIMENSIONS

| | | | |
|---|---|---|---|
| DIMENSION STYLE: MM ONLY | SCALE: 10:1 | DESIGN UNITS: METRIC | THIRD ANGLE PROJECTION |
| DRAWN BY: M.NABEI | DATE: '05/10/24 | TITLE: MINI MI2 REC. ASSY (SN) | |
| CHECKED BY: K.TOYODA | DATE: '05/10/24 | | |
| APPROVED BY: N.UKITA | DATE: '05/10/24 | molex MOLEX INCORPORATED | |
| MATERIAL NO.: SEE CHART | | DOCUMENT NO.: SD-51336-001 | SHEET NO.: 1 OF 1 |
| SIZE: A3 | THIS DRAWING CONTAINS INFORMATION THAT IS PROPRIETARY TO MOLEX INCORPORATED AND SHOULD NOT BE USED WITHOUT WRITTEN PERMISSION | | |