molex
one company > a world of innovation

This document was generated on 04/12/2010

PLEASE CHECK WWW.MOLEX.COM FOR LATEST PART INFORMATION

Part Number: 0512333013
Status: Active
Description: CRC™ Shielded Rectangular I/O Receptacle Housing for Male Terminal, Signal, 30 Circuits, Polarization Type B, Polarization Position C-4



Series image - Reference only

Documents:

Drawing (PDF)
Product Specification PS-51238-010 (PDF)
Product Specification PS-51238-018 (PDF)
RoHS Certificate of Compliance (PDF)

Agency Certification

CSA	LR19980
TUV	R72081037
UL	E29179

General

Product Family	I/O Connectors
Series	51233
Application	Panel-Mount, Wire-to-Wire
Component Type	Housing
Product Name	CRC™
Type	N/A

Physical

Boot Color	N/A
Circuits (Loaded)	N/A
Circuits (maximum)	30
Color - Resin	Black
Durability (mating cycles max)	100
Flammability	94V-0
Gender	Receptacle
Keying to Mating Part	Yes
Lock to Mating Part	Yes
Material - Metal	Stainless Steel
Material - Plating Mating	n/a
Material - Resin	Polyester
Number of Rows	6
Orientation	Vertical
PCB Locator	No
Packaging Type	Tray
Panel Mount	Front, Rear
Pitch - Mating Interface (in)	0.118 In
Pitch - Mating Interface (mm)	3.00 mm
Pitch - Term. Interface (in)	0.118 In
Pitch - Term. Interface (mm)	3.00 mm
Polarized to Mating Part	Yes
Polarized to PCB	N/A
Ports	1
Surface Mount Compatible (SMC)	No
Temperature Range - Operating	-40°C to +105°C
Termination Interface: Style	N/A
Waterproof / Dustproof	No

Electrical

Current - Maximum per Contact	3A
Shielded	No
Voltage - Maximum	250V AC (RMS)/DC

EU RoHS
ELV and RoHS Compliant
REACH SVHC
Contains SVHC: No
Halogen-Free Status
Not Reviewed

China RoHS

Need more information on product environmental compliance?

Email productcompliance@molex.com
For a multiple part number RoHS Certificate of Compliance, click here

Please visit the Contact Us section for any non-product compliance questions.

Search Parts in this Series
51233Series

Mates With
51239-300X plug housing|54332-300X plug assembly set

Use With
56116, 56117, 56118 and 56119 male terminal|56377-300* receptacle shell

Material Info

Reference - Drawing Numbers

Product Specification	PS-51238-010, PS-51238-018, RPS-51238-001
Sales Drawing	SD-51233-009

This document was generated on 04/12/2010

PLEASE CHECK WWW.MOLEX.COM FOR LATEST PART INFORMATION

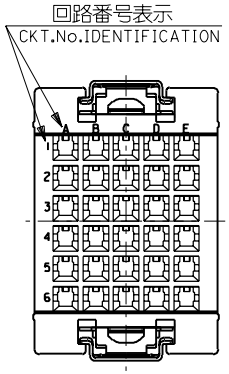

電線挿入側
WIRE SIDE

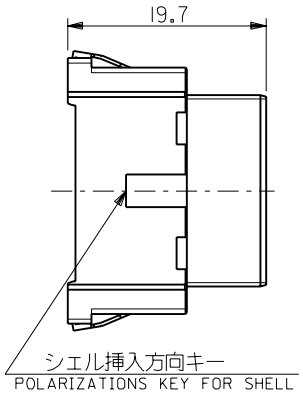

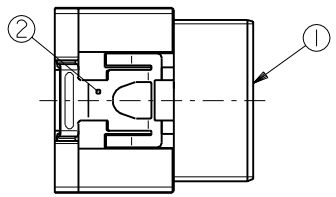

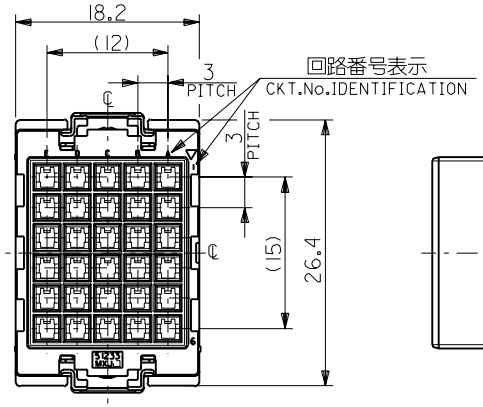

嵌合側
MATING SIDE

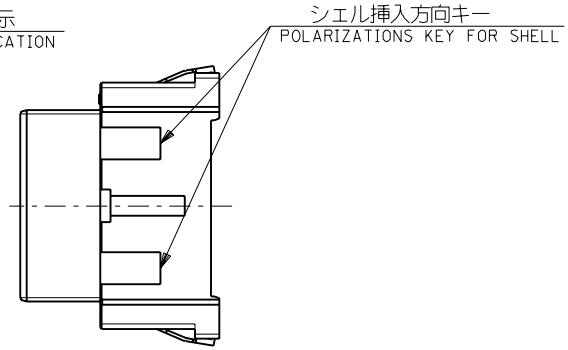

注記
NOTES

1. 材　質
MATERIAL
①ハウジング：ガラス入りＰＢＴ樹脂
HOUSING : PBT G.F.
ＵＬ９４Ｖ－０　色：黒
UL94V-0 COLOR : BLACK
②スプリング：ステンレス鋼　ｔ０．３
SPRING : STAINLESS STEEL t0.3
2. 適用端子：56116-8*90 ,56117-8*90
56118-8*90 ,56119-8*90
APPLECABLE CRIMP PIN : 56116-8*90 ,56117-8*90
56118-8*90 ,56119-8*90
3. 適用リセプタクル　シェル：56377-30**
APPLECABLE RECEPTACLE SHELL : 56377-30**
4. 嵌合相手：51239-300*
MEET WITH : 51239-300*

<誤嵌合防止キー（極性）タイプ> <POLARITY KEY TYPE>

51233-3011	51233-3012	51233-3013	51233-3014	51233-3015
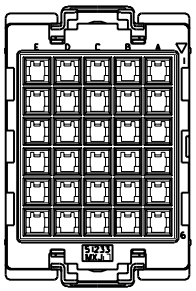	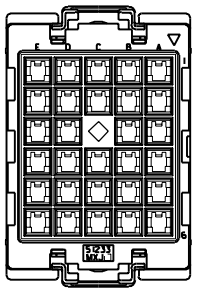	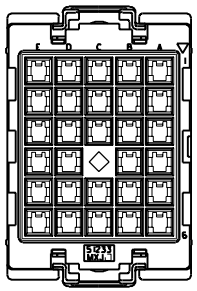	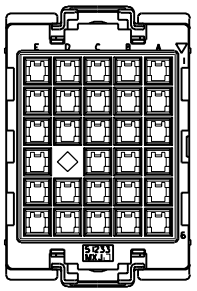	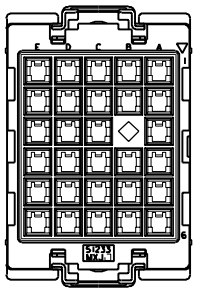
STANDARD TYPE	A TYPE	B TYPE	C TYPE	D TYPE

POLARITY POSITION (CIRCUIT No.)	POLARITY TYPE	MATERIAL No.	MODEL No.	CIRCUIT
B-3	D	51233-3015	51233-**1*	30
D-4	C	51233-3014		
C-4	B	51233-3013		
C-3	A	51233-3012		
—〃—	STANDARD	51233-3011		

DWG. NO. SD-51233-009

DO NOT SCALE DRAWING

EC NO. DRWN: CH'K: APPR:	EC NO. DRWN: CH'K: APPR:	EC NO. DRWN: CH'K: APPR:	REVISED '01/10/04 EC NO. J2002-0786 DRWN: S.AKIYAMA CH'K: J.MIYAZAWA APPR: YO.ITO	RELEASED '01/02/16 EC NO. JD2001-1040 DRWN: S.AKIYAMA CH'K: J.MIYAZAWA APPR: H.IKESUGI	DESCRIPTION
			A	0	REV

MATERIAL 材料: 注記参照 SEE NOTES
FINISH 仕上げ: —〃—
WIRE RANGE 適用電線範囲: —〃—
INS. RANGE 被覆外径: —〃—

GENERAL TOLERANCES: (UNLESS SPECIFIED) 一般公差

10 UNDER 未満	±0.2
10 OVER 以上 30 UNDER 未満	±0.25
30 OVER 以上	±0.3
ANGLE 角度	±3°

SCALE 2-1
DESIGN UNITS ☒mm ☐INCH
THIRD ANGLE PROJECTION
DIMENSIONS: ☐ mm/INCH ☐ INCH/mm ☒ mm ONLY
SHT REV
REVISE ON CAD ONLY

DRAWN BY & DATE S. Akiyama '01/01/25
CHECKED BY & DATE J. Miyazawa / Y. Ito
APPROVED BY & DATE H. Ikesugi

TITLE: COMPACT ROBOT CONN. (CRC) REC. PIN HS'G ASS'Y

molex MOLEX INCORPORATED

CAD FILENAME 51233009.S01
MATERIAL NO. SEE CHART
DRAWING NO. SD-51233-009
SHEET NO. 1 OF 4

THIS DRAWING CONTAINS INFORMATION THAT IS PROPRIETARY TO MOLEX INCORPORATED AND SHOULD NOT BE USED WITHOUT WRITTEN PERMISSION.

SIZE B

51233009.S01

EN-02J(097) MXJ-54

DWG. NO. SD-51233-009

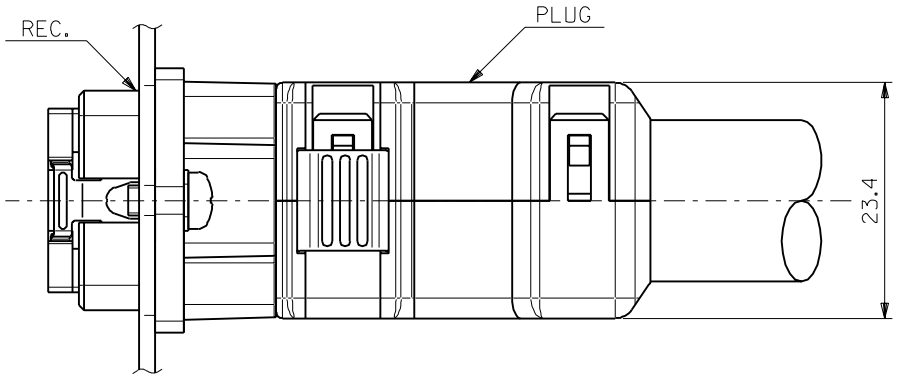

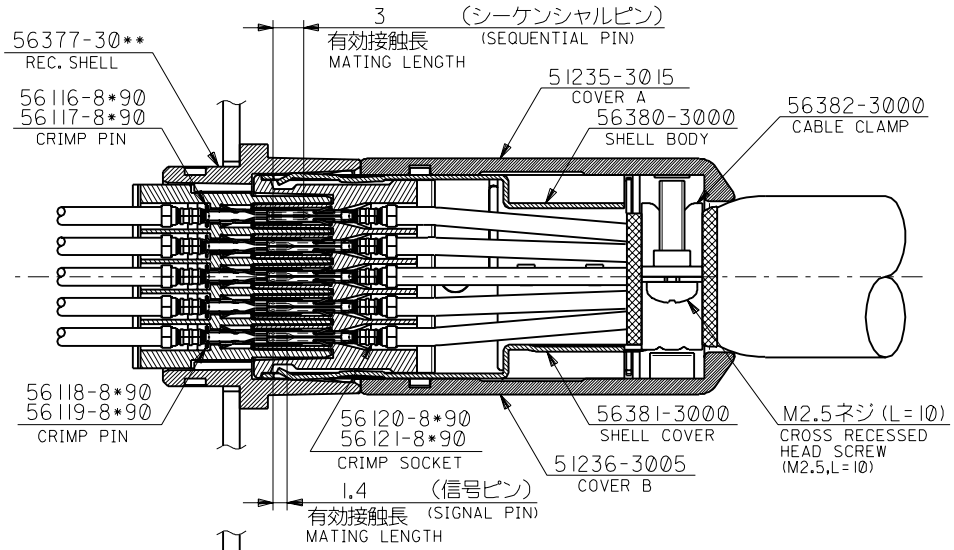

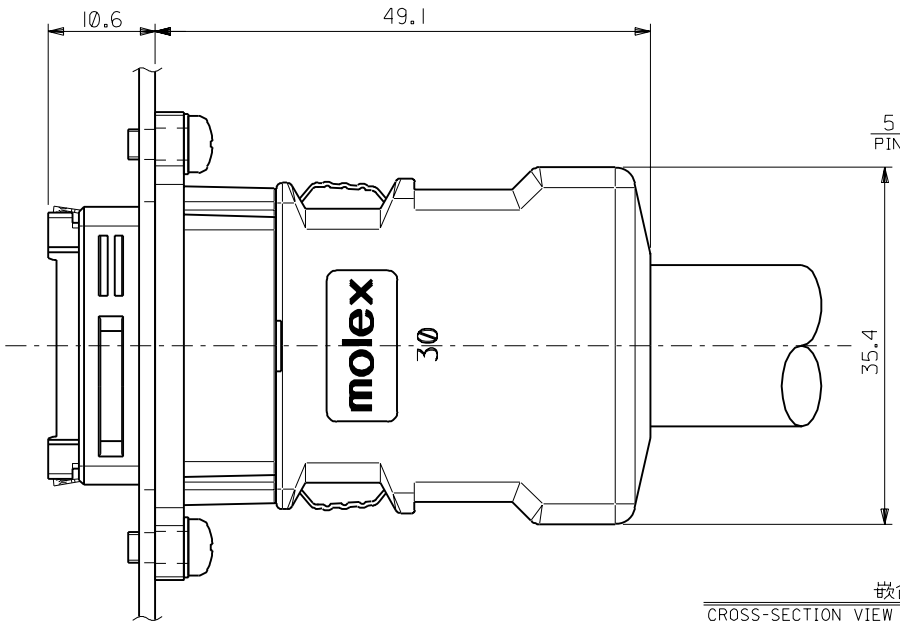

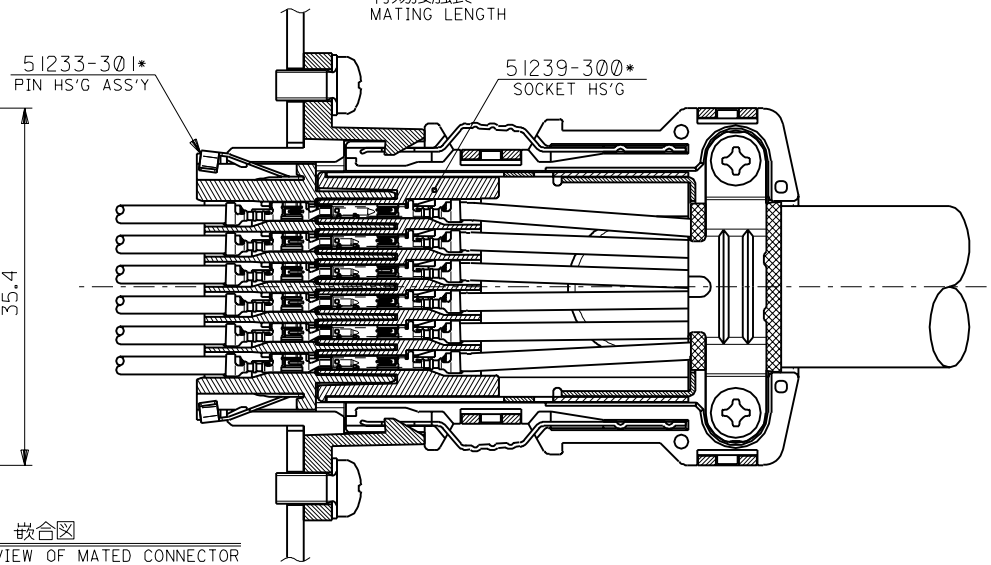

嵌合図
CROSS-SECTION VIEW OF MATED CONNECTOR

DO NOT SCALE DRAWING

	EC NO.	DRWN:	CH'K:	APPR:	DESCRIPTION	REV
					REVISED '01/10/04	A
	J2002-0786	S.AKIYAMA	J.MIYAZAWA	YO.ITO		
					RELEASED '01/02/16	0
	JD2001-1040	S.AKIYAMA	J.MIYAZAWA	H.IKESUGI		

MATERIAL 材料: 注記参照 SEE NOTES
FINISH 仕上げ
WIRE RANGE 適用電線範囲
INS. RANGE 被覆外径

GENERAL TOLERANCES: (UNLESS SPECIFIED) 一般公差

10 UNDER 未満	±0.2
10 OVER 以上 30 UNDER 未満	±0.25
30 OVER 以上	±0.3
ANGLE 角度	±3°

SCALE 2-1 | DESIGN UNITS ☒mm ☐INCH | THIRD ANGLE PROJECTION
DIMENSIONS: ☐mm/INCH ☐INCH/mm ☒mm ONLY
SHT | REV: REVISE ON CAD ONLY
DRAWN BY & DATE: S.Akiyama '01/01/25
CHECKED BY & DATE: J.Miyazawa / Y.Ito
APPROVED BY & DATE: H.Ikesugi
CAD FILENAME: 51233009.S02
TITLE: COMPACT ROBOT CONN. (CRC) REC. PIN HS'G ASS'Y
MOLEX INCORPORATED
MATERIAL NO.: SEE CHART
DRAWING NO.: SD-51233-009
SHEET NO.: 2 OF 4
SIZE: B

THIS DRAWING CONTAINS INFORMATION THAT IS PROPRIETARY TO MOLEX INCORPORATED AND SHOULD NOT BE USED WITHOUT WRITTEN PERMISSION.

51233009.S02

EN-02J(097) MXJ-54

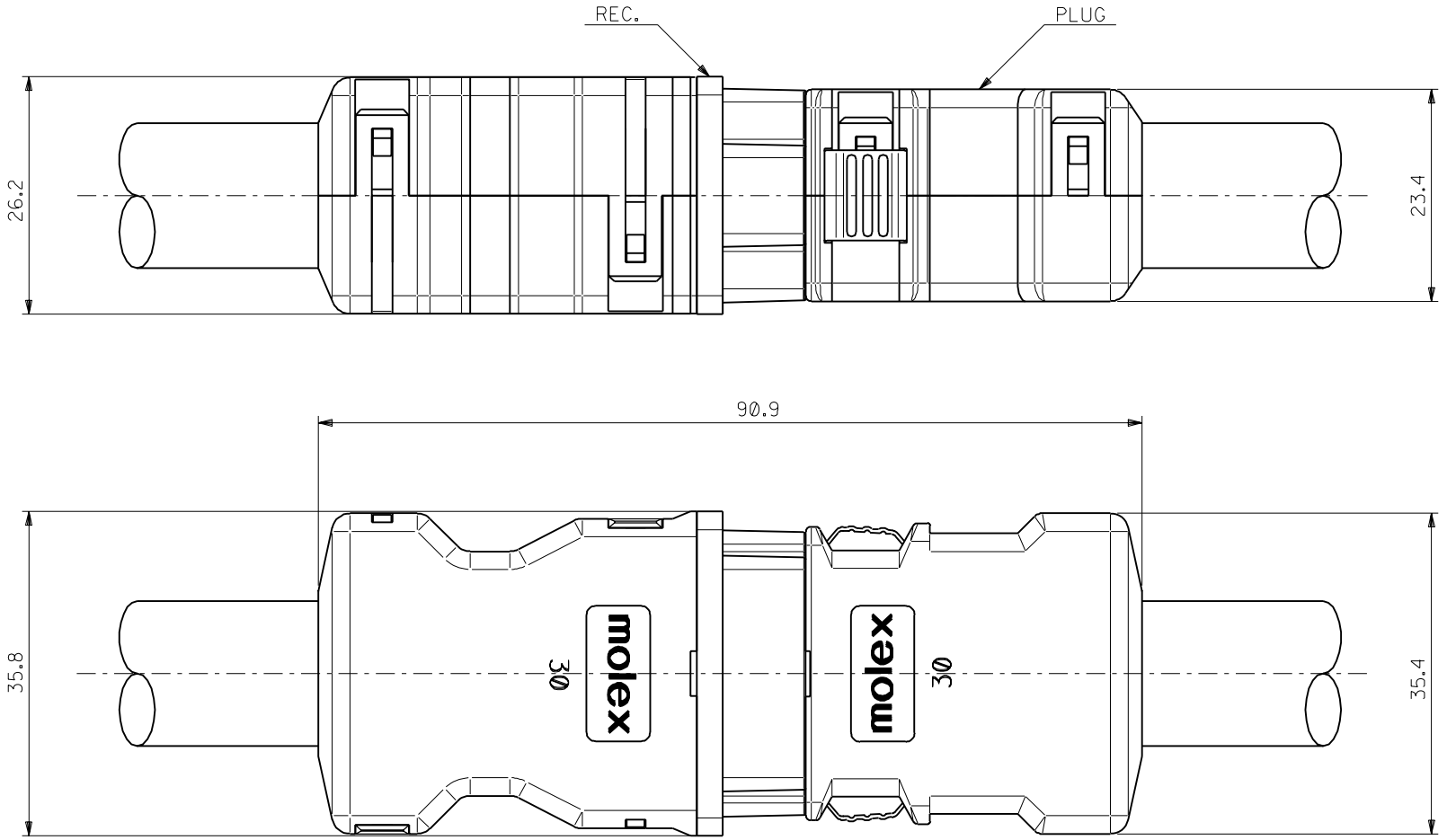

嵌合図（中継タイプ）
CROSS-SECTION VIEW OF MATED CONNECTOR
(WIRE TO WIRE TYPE)

DWG. NO. SD-51233-009

DO NOT SCALE DRAWING

REV	DESCRIPTION	EC NO.	DRWN	CH'K	APPR
A	REVISED '01/10/04	J2002-0786	S.AKIYAMA	J.MIYAZAWA	YO.ITO
0	RELEASED '01/02/16	JD2001-1040	S.AKIYAMA	J.MIYAZAWA	H.IKESUGI

MATERIAL 材料: 注記参照 SEE NOTES
FINISH 仕上げ: #
WIRE RANGE 適用電線範囲: #
INS. RANGE 被覆外径: #

GENERAL TOLERANCES: (UNLESS SPECIFIED) 一般公差

10 UNDER 未満	±0.2
10 OVER 以上 30 UNDER 未満	±0.25
30 OVER 以上	±0.3
ANGLE 角度	±3°

SCALE 2-1
DESIGN UNITS ☒mm ☐INCH
THIRD ANGLE PROJECTION
DIMENSIONS: ☐mm/INCH ☐INCH/mm ☒mm ONLY
SHT REV
REVISE ON CAD ONLY

DRAWN BY & DATE: S.Akiyama '01/01/25
CHECKED BY & DATE: J.Miyazawa / Y.Ito
APPROVED BY & DATE: H.Ikesugi
CAD FILENAME: 51233009.S03

TITLE:
COMPACT ROBOT CONN. (CRC)
REC. PIN HS'G ASS'Y

molex MOLEX INCORPORATED

MATERIAL NO.: SEE CHART
DRAWING NO.: SD-51233-009
SHEET NO.: 3 OF 4
SIZE: B

THIS DRAWING CONTAINS INFORMATION THAT IS PROPRIETARY TO MOLEX INCORPORATED AND SHOULD NOT BE USED WITHOUT WRITTEN PERMISSION.

51233009.S03

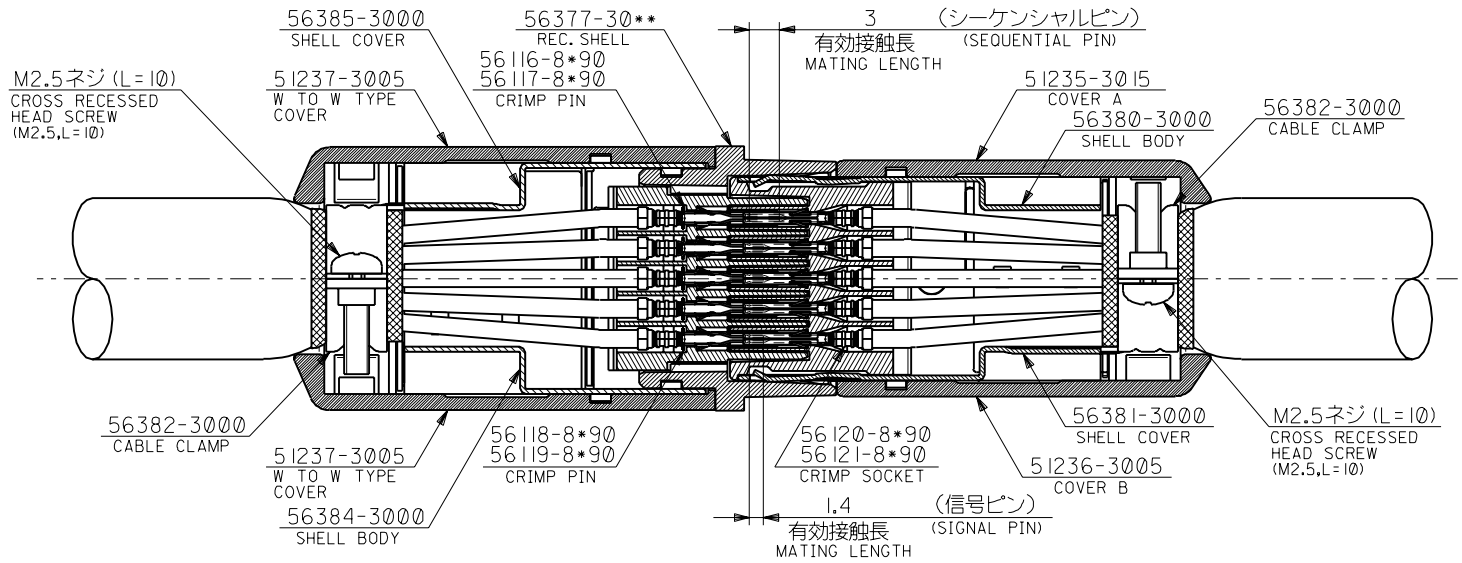

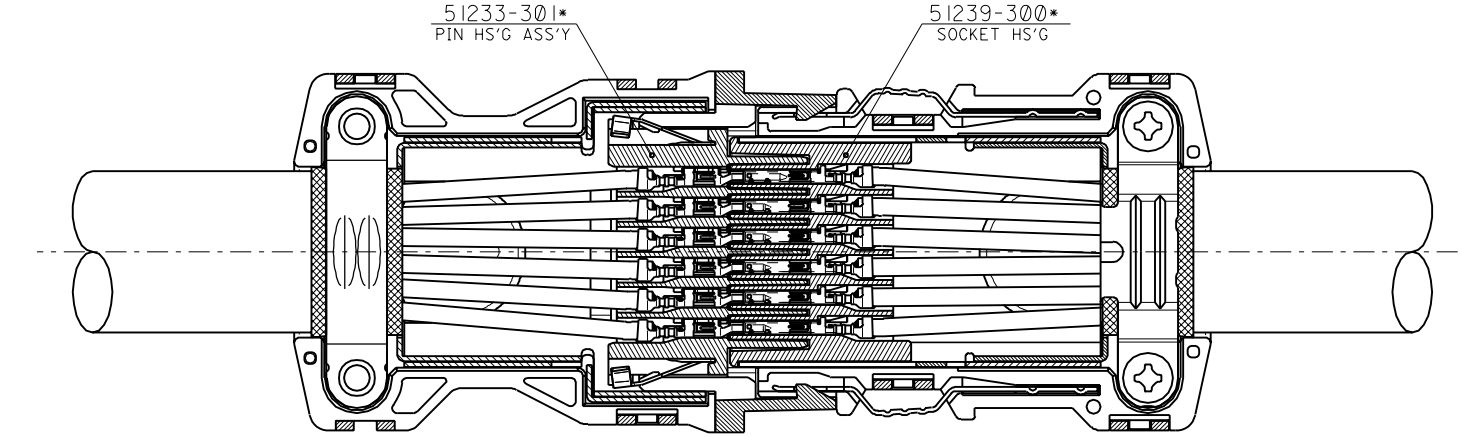

嵌合図（中継タイプ）
CROSS-SECTION VIEW OF MATED CONNECTOR
(WIRE TO WIRE TYPE)

DWG. NO. SD-51233-009

DO NOT SCALE DRAWING

	EC NO.	DRWN:	CH'K:	APPR:
A	J2002-0786	S.AKIYAMA	J.MIYAZAWA	YO.ITO
0	JD2001-1040	S.AKIYAMA	J.MIYAZAWA	H.IKESUGI

REVISED '01/10/04
RELEASED '01/02/16
DESCRIPTION
REV

MATERIAL 材料: 注記参照 SEE NOTES
FINISH 仕上げ
WIRE RANGE 適用電線範囲
INS. RANGE 被覆外径

GENERAL TOLERANCES: (UNLESS SPECIFIED) 一般公差

10 UNDER 未満	±0.2
10 OVER 以上 30 UNDER 未満	±0.25
30 OVER 以上	±0.3
ANGLE 角度	±3°

SCALE 2-1
DESIGN UNITS ☒mm ☐INCH
THIRD ANGLE PROJECTION
DIMENSIONS: ☐mm/INCH ☐INCH/mm ☒mm ONLY
SHT REV
REVISE ON CAD ONLY

DRAWN BY & DATE: S.Akiyama '01/01/25
CHECKED BY & DATE: J.Miyazawa / Y.Ito
APPROVED BY & DATE: H.Ikesugi
CAD FILENAME: 51233009.S04

TITLE:
COMPACT ROBOT CONN. (CRC)
REC. PIN HS'G ASS'Y

molex MOLEX INCORPORATED

MATERIAL NO.: SEE CHART
DRAWING NO.: SD-51233-009
SHEET NO.: 4 OF 4
SIZE: B

THIS DRAWING CONTAINS INFORMATION THAT IS PROPRIETARY TO MOLEX INCORPORATED AND SHOULD NOT BE USED WITHOUT WRITTEN PERMISSION.

51233009.S04

EN-02J(097) MXJ-54