This document was generated on 04/15/2010

PLEASE CHECK WWW.MOLEX.COM FOR LATEST PART INFORMATION

Part Number: 0503988100

Status: Active

Description: 2.50mm (.098") Pitch Wire-to-Wire Crimp Terminal, Male, 50398, Bag, for 51112 Housing

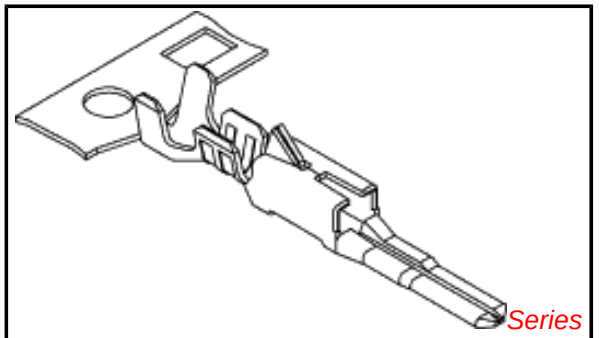

image - Reference only

Documents:

3D Model
Drawing (PDF)
Product Specification PS-51111-001 (PDF)
RoHS Certificate of Compliance (PDF)

General

Product Family	Crimp Terminals
Series	50398
Crimp Quality Equipment	Yes
Product Name	N/A

Physical

Gender	Male
Material - Metal	Phosphor Bronze
Material - Plating Mating	Tin
Material - Plating Termination	Tin
Packaging Type	Bag
Plating min: Mating (µin)	36
Plating min: Mating (µm)	0.90
Plating min: Termination (µin)	36
Plating min: Termination (µm)	0.90
Termination Interface: Style	Crimp or Compression
Wire Insulation Diameter	1.15-1.80mm (.045-.071")
Wire Size AWG	22, 24, 26, 28
Wire Size mm²	N/A

Material Info

Reference - Drawing Numbers

Product Specification	PS-51111-001, RPS-500592-001, RPS-500592-002, RPS-500592-003, RPS-51111-004, RPS-51112-003
Sales Drawing	SD-50398-001

EU RoHS
ELV and RoHS Compliant
REACH SVHC
Contains SVHC: No
Halogen-Free Status
Halogen-Free

China RoHS

Need more information on product environmental compliance?

Email productcompliance@molex.com
For a multiple part number RoHS Certificate of Compliance, click here

Please visit the Contact Us section for any non-product compliance questions.

Search Parts in this Series
50398Series

Mates With
50397

Use With
51112

Application Tooling | **FAQ**

Tooling specifications and manuals are found by selecting the products below. Crimp Height Specifications are then contained in the Application Tooling Specification document.

Japan

Description	Product #
Hand Crimp Tool	0573165000
Hand Extraction Tool	0573166000
Extraction Tool	0573166100

This document was generated on 04/15/2010

PLEASE CHECK WWW.MOLEX.COM FOR LATEST PART INFORMATION

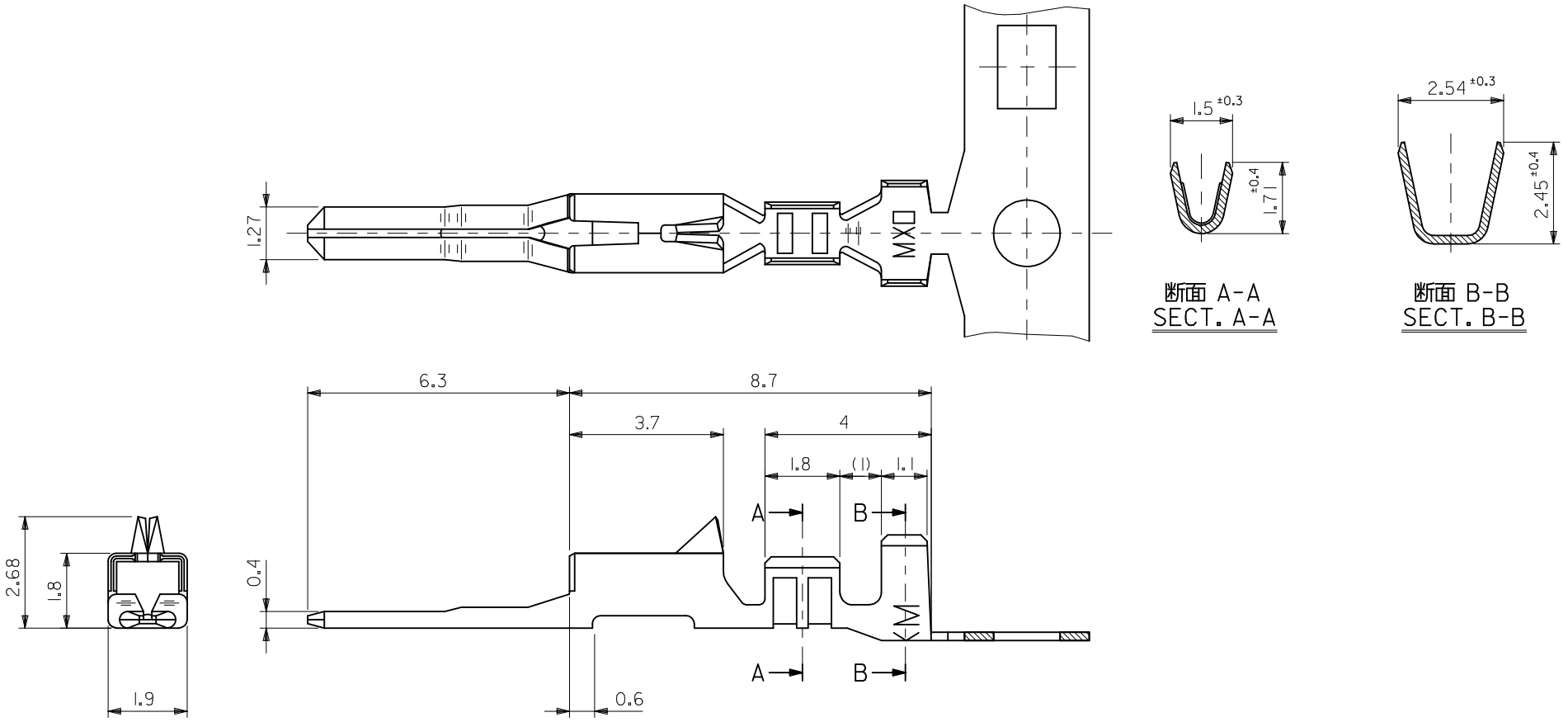

断面 A-A
SECT. A-A

断面 B-B
SECT. B-B

注記
NOTES

1. 適合ハウジング：5111 2シリーズ
   APPLICABLE HOUSING：5111 2 SERIES
2. 材料 MATERIAL
   りん青銅（t = 0.2）
   PHOSPHOR BRONZE
   錫メッキ 0.9 μm 以上 リフロー処理（前めっき）
   TIN 0.9 μm MIN. REFLOW TREATMENT (PRE-PLATED)
3. 適用電線サイズAWG #22-28
   被覆外径：1.15~1.8mm
4. ELV及びRoHS適合品
   ELV AND RoHS COMPLIANT

PLASTIC BAG	50398-8100	バラ状 LOOSE
REEL	50398-8000	連鎖状 CHAIN
PACKAGING SPEC.	オーダー番号 ORDER NO.	形態 FORM

CONNECTOR SERIES NO. 50398-8*00

RELEASED
EC NO: J2010-1818
DRWN:NYOSHIKAWA 2010/03/10
CH'KD:KASAKAWA 2010/03/10
APPR:NUKITA 2010/03/11
DESCRIPTION
REV 0

GENERAL TOLERANCES (UNLESS SPECIFIED)

10 UNDER	±0.2
10 OVER 30 UNDER	±0.25
30 OVER	±0.3
ANGULAR ±3 °	

DRAFT WHERE APPLICABLE MUST REMAIN WITHIN DIMENSIONS

DIMENSION STYLE: MM ONLY
SCALE: 10:1
DESIGN UNITS: METRIC
THIRD ANGLE PROJECTION

DRAWN BY: NYOSHIKAWA DATE: 2010/03/10
CHECKED BY: KASAKAWA DATE: 2010/03/10
APPROVED BY: NUKITA DATE: 2010/03/10

TITLE: 2.5 WIRE TO WIRE CONN. CRIMP PIN

MOLEX INCORPORATED

MATERIAL NO.: SEE TABLE
DOCUMENT NO.: SD-50398-001
SHEET NO.: 1 OF 1
SIZE: A3

THIS DRAWING CONTAINS INFORMATION THAT IS PROPRIETARY TO MOLEX INCORPORATED AND SHOULD NOT BE USED WITHOUT WRITTEN PERMISSION