050-324

PRODUCT BRIEF

100 MBPS-2.5 GBPS
PRINTED CIRCUIT BOARD (PCB) MOUNT TRANSCEIVER
1310NM DFB TRANSMITTER, PIN TIA RECEIVER
SMALL & COMPACT WITH RUGGED CONSTRUCTION FOR HARSH ENVIRONMENTS

REV	DESCRIPTION	DATE	APPROVED
2	Preliminary	6/4/2015	SZ

BF15U2-1919

THIS COPYRIGHTED DOCUMENT IS THE PROPERTY OF GLENAIR, INC. AND IS FURNISHED ON THE CONDITION THAT IT IS NOT TO BE DISCLOSED, REPRODUCED IN WHOLE OR IN PART, OR USED TO SOLICIT QUOTATIONS FROM COMPETITIVE SOURCES, OR USED FOR MANUFACTURE BY ANYONE OTHER THAN GLENAIR, INC. WITHOUT WRITTEN PERMISSION FROM GLENAIR, INC. THE INFORMATION HEREIN HAS BEEN DEVELOPED AT GLENAIR'S EXPENSE AND MAY BE USED FOR ENGINEERING EVALUATION AND INCORPORATION INTO TECHNICAL SPECIFICATIONS AND OTHER DOCUMENTS WHICH SPECIFY PROCUREMENT OF PRODUCTS FROM GLENAIR, INC.

050-324 Product Brief
PCB Mount Transceiver for Single Mode Fiber
100 Mbps – 2.5 Gbps, 3.3V

PCB Mount Fiber Optic Transceiver, 100M-2.5Gbps, SMF, 3.3V

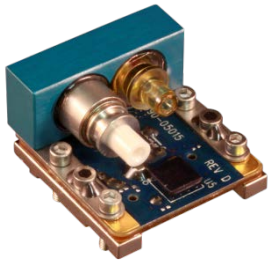

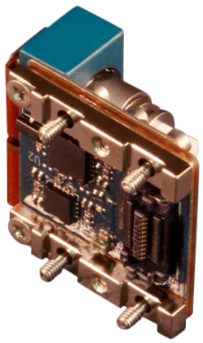

Glenair 050-324, is a ruggedized harsh environment PCB mount Transceiver with electrical and optical functionality equivalent to SFP transceivers but with mechanical design that is suited to the harsh temperature and vibration environments found in the Military, Aerospace, Railway, Oil and Gas, and Industrial applications. The PCB mount optical transceivers also support optional Digital Monitoring Interface (DMI) features in accordance with SFF 8472. The Transceiver is comprised of a transmitter section and a receiver section that resides on a common package and interface with a host board through a high speed electrical connector.

The transmitter section includes the Transmitter Optical Subassembly (TOSA) and laser driver circuitry. The TOSA, containing an DFB (Distributed Feedback) Laser light source, is located at the optical interface and mates with the GC optical connector. The TOSA is driven by a laser driver, which converts differential logic signals into an analog laser diode drive current. This laser driver circuit regulates the optical power at a constant level provided the data pattern is DC balanced (for example 8B10B encoding).

The receiver section includes the Receiver Optical Subassembly (ROSA) and amplification/quantization circuitry. The ROSA, containing a PIN photodiode and trans-impedance preamplifier, is located at the optical interface and mates with the GC optical connector. The ROSA is mated to a limiting amplifier IC that provides post-amplification and quantization. Also included is a Loss Of Signal (LOS) detection circuit.

KEY FEATURES/BENEFITS

- SFP Compatible Electrical I/O signal levels
- 1310nm DFB lasers to support up to 2.5 Gbps
- 40km at 1.25Gbps
- PIN PD to support high sensitivity up to 2.5 Gbps
- Industry standard CML input and outputs that make for simple integration on customer host PCB
- Glenair Rugged GC Optical connector for high shock and vibration applications.
- Transceiver is securely mounted with screws to PCB to ensure excellent shock and vibration performance
- High-Speed Electrical plug-in connector eliminates the need for soldering & enables ease of servicing
- Captive screws to simplify manufacturing logistics and assembly
- Compact Size: Approx. 0.8” x 0.9” x 0.5”
- -40°C to +85°C Operating Case Temperature
- Glenair fiber jumpers connect from transceiver to any Glenair Mil/Aero Fiber Optic Connector Style
- Evaluation fixtures available
- Digital Diagnostic and Monitoring (DMI) based on SFF-8472, enables monitoring of:
  - Transmitted optical power
  - Received optical power,
  - Laser bias current,
  - Temperature
  - Supply voltage

APPLICATIONS

- Harsh Environment such as: Airborne, Tactical, Railway, Industrial, Oil and Gas and Shipboard applications
  - Ethernet, Fibrechannel, 1x, 2x, 4x, SFPDP

HOW TO ORDER

Table 1 Part Number Options

Part Number	Description
050-324-1-D	100Mbps-2.5Gbps, with DMI

Ratings and Specifications

TABLE 2 ABSOLUTE MAXIMUM RATINGS

Parameter	Symbol	Min	Typ	Max	Units	Notes
Storage Temperature	Ts	-55		+100	°C	
Supply Voltage	V_{cc}	-0.4		3.8	V	VccT & VccR may not differ by more than 0.5V

TABLE 3 OPERATING CONDITIONS

Parameter	Symbol	Min	Typ	Max	Units	Notes
Operating Temperature, Case	T_{op}	-40		+85	°C	
Supply Voltage	V_{cc}	3.135	3.3	3.465	V	
Supply Current	Icc		180	250	mA	Typical @ +85°C
Power Supply Noise (Peak-Peak)	V_{cc_ripple}			100	mV	

TABLE 4 ELECTRO-OPTICAL CHARACTERISTICS – TRANSMITTER

Parameter	Symbol	Min	Typ	Max	Units	Notes
Optical Output Power	P_{OUT}	-1	1	+3	dBm	
Extinction Ratio, 1.25Gbps	Er	7	10		dB	Exceeds OMA for GbE, 1FC
Extinction Ratio, 2.125 Gbps	Er	6			dB	Exceeds OMA for 2FC
Optical Wavelength	λ_{OUT}	1290	1310	1330	nm	
Spectral Width, FWHM	$\Delta\lambda$			1	nm	
Relative Intensity Noise	RIN			-117	dB/Hz	
Transmitter Differential Input Impedance	Zin		100		Ohms	AC coupled Internally
Differential Input Voltage	Vin_d	250		2200	mV_{p-p}	CML, 100 ohm

TABLE 5 ELECTRO-OPTICAL CHARACTERISTICS - RECEIVER

Parameter	Symbol	Min	Typ	Max	Units	Notes
050-324-1-D						
Sensitivity, BER 10^{-12}, PRBS 2^{-7}-1, Er 10 dB	P_{IN}		-23	-22	dBm	PIN PD @ 1.25 Gbps
Sensitivity, BER 10^{-12}, PRBS 2^{-7}-1, Er 10 dB	P_{IN}		-23		dBm	PIN PD @ 2.5 Gbps
Overload, BER 10^{-12}, PRBS 2^{-7}-1	P_{IN}	-1			dBm	@1.25Gbps or @ 4.25 Gbps
Optical Wavelength	λ_{IN}	1270		1600	nm	
Receiver Differential Output Impedance	Zout		100		Ohms	AC coupled internally
Differential Output Voltage Swing	Vout_d	600		1200	mV	CML, 100 ohm
LOS Assert Level	LOS		-25	-23	dBm	@ 1.25Gbps
LOS Hysteresis	LOS_{HYS}	1.25	2.2		dB	@ 1.25Gbps

WARNING: DO NOT OPERAT TRANSMITTER TO RECEIVER IN A LOOP BACK CONFIGURATION WITHOUT AN OPTICAL ATTENUATOR. THE TRANSMITTER POWER EXCEEDS THE MAXIMUM RECEIVER INPUT POWER WITHOUT AN OPTICAL ATTENUATOR.

©2015 Glenair, Inc.

Ratings and Specifications (continued)

TABLE 6 COMPLIANCE SPECIFICATIONS

CHARACTERISTIC	Standard	Condition	Notes
Mechanical Shock	MIL-STD-810	Para. 516.6, proc. I, 650g	0.9 ms operating
Mechanical Vibration	MIL-STD-810	Para. 514.6, 40g rms	Random, operating
ESD	MIL-STD-883		1000V HBM
Flame Resistance	MIL-STD-1344	Method 1012, Cond. B	30 seconds
Damp Heat	MIL-STD-1344	Method 1002.2, Cond. B	10 cycles , 24 hours
Eye Safety	CDRH and IEC-825	Class 1 Laser Product	

FIGURE 1 - OUTLINE DRAWING CONTINUED (MARKING)

LABELING:

Each unit will be shipped in an antistatic bag. The label on the antistatic bag shall be at a minimum Arial size 10 black font and contain at a minimum the following information:

ANTISTATIC BAG LABEL:
Glenair
Cage Code (06324)
Part Number (PN 050-xxx as required)
Date Code (DC xxxx)
Serial Number (SN 123456)

Each unit will be marked, either with a label or laser engraving, as follows:

1. Marking font to be Arial, greater than .08 inches in height.
2. Minimum Marking on each part will include the following:
   - Glenair
   - Serial number
   - Glenair Part Number

Example Minimum Marking:
GLENAIR SN123456
050-324-1-D

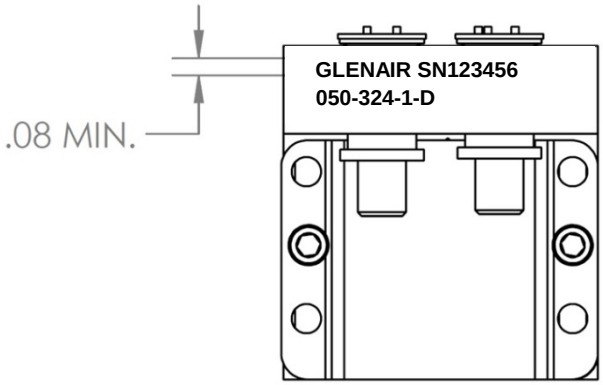

FUNCTIONAL DESCRIPTION

Figure 2 PCB mount Transceiver Block Diagram

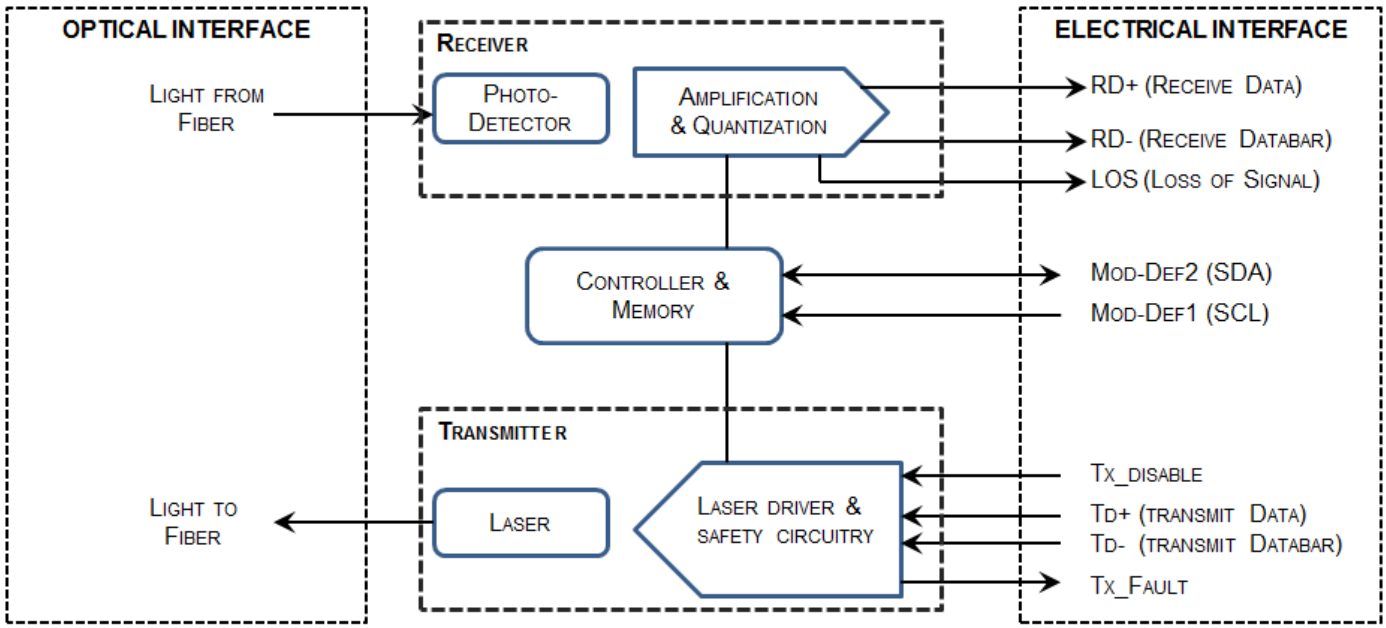

TRANSMITTER SECTION

Transmit Disable (Tx_Disable)

The transmitter section of the transceiver accepts a TTL and CMOS compatible transmit disable control signal input that shuts down the transmitter optical output. A high signal disables the transmitter while a low signal allows normal transceiver operation. Also laser is disabled when TX Disable is open. In the event of a fault (e.g. eye safety circuit activated), cycling this control signal resets the module. Host systems should allow a 10ms interval between successive assertions of this control signal.

Transmit Fault (Tx_Fault)

A catastrophic laser fault will activate the transmitter signal, TX_FAULT, and disable the laser. This signal is an open collector output (pull-up required on the host board). A low signal indicates normal laser operation and a high signal indicates a fault. The TX_FAULT will be latched high when a laser fault occurs and is cleared by toggling the TX_DISABLE input or cycling the power of the transceiver. The transmitter fault condition can also be monitored via the 2-wire serial interface (address A2, byte 110, bit 2).

Eye Safety Circuit

The Transmitter section provides Class 1 eye safety by design and is compliant with US FDA CDRH AEL Class 1 and EN(IEC) 60825-1,2, EN60950 Class 1. The eye safety circuit continuously monitors optical output power levels and will disable the transmitter and assert a TX_FAULT signal upon detecting an unsafe condition. Such unsafe conditions can be created by inputs from the host board (Vcc fluctuation, unbalanced code) or faults within the module.

RECEIVER SECTION

Receiver Loss of Signal (LOS)

The Loss Of Signal (LOS) output indicates an unusable optical input power level. The post-amplification IC includes transition detection circuitry which monitors the ac level of incoming optical signals and provides a TTL/CMOS compatible status signal to the host. A low LOS logic level indicates the presence of an optical input while a high LOS logic level indicates an unusable optical input. The LOS thresholds are factory-set so that a high output indicates a definite optical fault has occurred (e.g. failed transmitter, broken or disconnected fiber connection to the transceiver, etc.). The LOS can also be monitored via the 2-wire serial interface (address A2h, byte 110, bit 1).

FUNCTIONAL I/O

The PCB mount transceiver accepts industry standard differential signals such as LVPECL and CML within the scope of the SFP MSA. To simplify board requirements, transmitter bias resistors and ac coupling capacitors are incorporated, per SFF-8074i, and hence are not required on the host board. The module is AC-coupled and internally terminated.

Figure 3 illustrates a recommended interface circuit to link the PCB mount transceiver to the supporting Physical Layer integrated circuits.

The PCB mount transceiver interfaces with the host circuit board through twenty I/O pins identified by function in Table 7. The transceiver high speed transmit and receive interfaces requires SFP MSA compliant signal lines on the host board. The Tx_Disable, Tx_Fault, and Rx_LOS lines require TTL lines on the host board (per SFF-8074i) if used. If an application chooses not to take advantage of the functionality of these pins, TX_Disable need to be tied to GND, TX_Fault and RX_LOS do not need to be connected.

Digital Diagnostic Interface and Serial Identification (EEPROM)
The PCB mount transceiver is compatible with the SFF-8074i SFP specification and with SFF-8472, the SFP specification for Digital Diagnostic Monitoring Interface. Both specifications can be found at http://www.sffcommittee.org.

©2015 Glenair, Inc.

FIGURE 3 RECOMMENDED PCB MOUNT TRANSCEIVER HOST BOARD SCHEMATIC

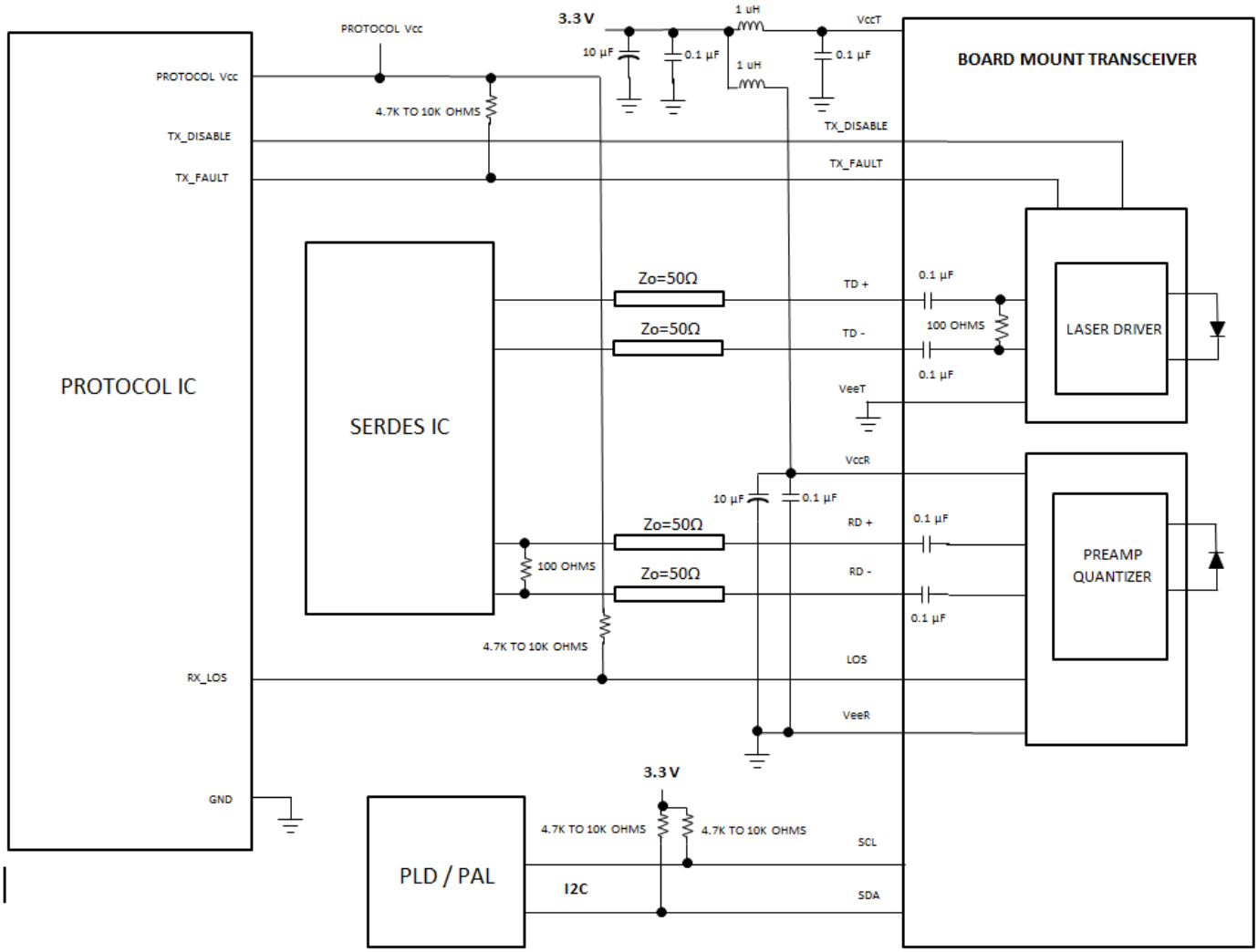

The PCB mount transceiver features EEPROM for Serial ID, which contains the product data stored for retrieval by host equipment. This data is accessed via the 2-wire serial EEPROM protocol of the ATMEL AT24C01A or similar, in compliance with the industry standard SFP Multi-Source Agreement. The base EEPROM memory, bytes 0-255 at memory address 0xA0, is organized in compliance with SFF-8074i. The I2C accessible memory page address 0xB0 is used internally by SFP for the test and diagnostic purposes and it is reserved.

As an enhancement to the conventional SFP interface defined in SFF-8074i, the PCB mount Transceiver is compliant to SFF-8472 (digital diagnostic interface for optical transceivers). This new digital diagnostic information is stored in bytes 0-255 at memory address 0xA2.Using the 2-wire serial interface defined in the MSA, the PCB mount Transceiver provides real time temperature, supply voltage, laser bias current, laser average output power and received input power. These parameters are internally calibrated, per the SFF-8472 MSA. The digital diagnostic interface also adds the capability to

monitor for Transmitter Faults (TX_FAULT), and monitor for Receiver Loss of Signal (RX_LOS). The diagnostic information provides the opportunity for Predictive Failure Identification, Compliance Prediction, Fault Isolation and Component Monitoring.

Predictive Failure Identification

The predictive failure feature allows a host to identify potential link problems before system performance is impacted. Prior identification of link problems enables a host to service an application via “fail over” to a redundant link or replace a suspect device, maintaining system uptime in the process. For applications where ultra-high system uptime is required, the PCB mount Transceiver provides a means to monitor two real-time laser metrics associated with observing laser degradation and predicting failure: average laser bias current (Tx_Bias) and average laser optical power (Tx_Power).

Compliance Prediction

Compliance prediction is the ability to determine if an optical transceiver is operating within its operating and environmental requirements. The PCB mount Transceiver provide real-time access to transceiver internal supply voltage and temperature, allowing a host to identify potential component compliance issues. Received optical power is also available to assess compliance of fiber cable plant and remote transmitter. When operating out of requirements, the link cannot guarantee error free transmission.

Fault Isolation

The fault isolation feature allows a host to quickly pinpoint the location of a link failure, minimizing downtime. For optical links, the ability to identify a fault at a local device, remote device or cable plant is crucial to speeding service of an installation. PCB mount Transceiver real-time monitors of Tx_Bias, Tx_Power, Vcc, Temperature and Rx_Power can be used to assess local transceiver current operating conditions. In addition, status flag Rx Loss of Signal (LOS) is mirrored in memory and available via the two-wire serial interface.

Component Monitoring

Component evaluation is another use of the PCB mount Transceiver real-time monitors of Tx_Bias, Tx_Power, Vcc, Temperature and Rx_Power. Potential uses are as debugging aids for system installation and design, and transceiver parametric evaluation for factory or field qualification. For example, temperature per module can be observed in high density applications to facilitate thermal evaluation of systems that incorporate this PCB mount transceiver

Required Host Board Components

A power supply noise rejection filter as describe in SFP MSA is required on the host PCB to meet data sheet performance. This is filter incorporates an inductor which should be rated to 400 mADC and 1 Ω series resistance or better. It should not be replaced with a ferrite. The required filter is illustrated in Figure 4. Also, the host PCB for the PCB mount transceiver requires 4.7 K to 10 KΩ pull-up resistors for TX_FAULT, LOS, SCA and SDL lines.

FIGURE 4 RECOMMENDED HOST BOARD POWER SUPPLY FILTERING CIRCUIT

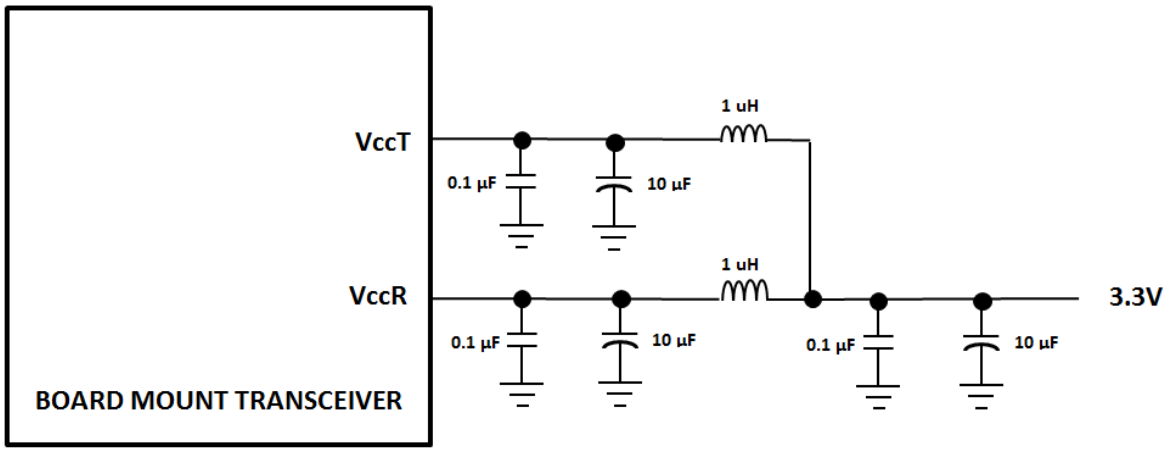

Fiber Compatibility

The transceiver is capable of transmission up to 40km with 9/125 µm fiber at 1.25Gbps data rate.

Electrostatic Discharge (ESD)

The Transceiver is compatible with ESD levels found in typical manufacturing and operating environments as described JEDEC EIA JESD22-A114-A, Class 1 (<2000Volts) HBM. Glenair recommends that devices are handled with ESD precautions to limit exposure to below 500V HBM.

There are two design cases in which immunity to ESD damage is important. The first case is during handling of the transceiver prior to insertion to the host board. To protect the transceiver, it's important to use standard industry ESD handling precautions. These precautions include using grounded wrist straps, work benches, and floor mats in ESD controlled areas. The ESD sensitivity of the Glenair PCB mount transceiver is compatible with typical industry production environments.

The second case to consider is static discharges to the exterior of the host equipment after installation, in which case the transceiver may be subject to system-level ESD requirements.

Application Support

To assist in the transceiver design and evaluation process, Glenair offers the following aids:

- Evaluation board & Product Manual, part number 050-329, which facilitates in the testing of the PCB mount transceiver.
- 3D Step file to support modeling of mechanical fit and routing
- PADS schematic and PCB layout library files that can be exported into customer's PCB software design program
- Applications Aid Example of PCB layout including details of high speed transmission designs

Customer Manufacturing Processes

This module is mounted with screws and interfaces with a high-speed low cost surface mount electrical connector residing on the host PC board. The PCB mount transceiver is not designed for aqueous wash, IR reflow, or wave soldering processes and should be mounted on the host board after host PC board has been through its assembly process.

©2015 Glenair, Inc.

TABLE 8 TWO-WIRE INTERFACE ID: DATA FIELDS – ADDRESS A0h

Byte Decimal	# Hex	Data Notes	Byte Decimal	# Hex	Data Notes
0	80	Glenair PCB mount Transceiver	37	00	Vendor OUI (NOT USED)
1	04	Serial ID Module Definition	38	00	Vendor OUI (NOT USED)
2	80-	"GC" Fiber Optic Connector	39	00	Vendor OUI (NOT USED)
3	00		40	30	"0" Vendor Part Number ASCII character
4	00		41	35	"5" Vendor Part Number ASCII character
5	00		42	30	"0" Vendor Part Number ASCII character
6	02	1000BASE-LX	43	2D	"-" Vendor Part Number ASCII character
7	00		44	33	"3" Vendor Part Number ASCII character
8	00		45	32	"2" Vendor Part Number ASCII character
9	00		46	34	"4" Vendor Part Number ASCII character
10	00		47	2D	"-" Vendor Part Number ASCII character
11	01	Compatible with 8B/10B encoded data	48	31	"1" Vendor Part Number ASCII character
12	32	BR, 5Gbps	49	20	Note 5
13	00		50	20	" " Vendor Part Number ASCII Character
14	28	9/125 µm Fiber, 40km @ 1.25Gbps	51	20	" " Vendor Part Number ASCII Character
15	00		52	20	" " Vendor Part Number ASCII Character
16	00		53	20	" " Vendor Part Number ASCII Character
17	00		54	20	" " Vendor Part Number ASCII Character
18	00		55	20	" " Vendor Part Number ASCII Character
19	00		56	20	" " Vendor REV Level ASCII Character
20	47	"G" Vendor NAME ASCII Character	57	20	" " Vendor REV Level ASCII Character
21	4C	"L" Vendor NAME ASCII Character	58	20	" " Vendor REV Level ASCII Character
22	45	"E" Vendor NAME ASCII Character	59	20	" " Vendor REV Level ASCII Character
23	4E	"N" Vendor NAME ASCII Character	60	05	Hex Byte of Laser Wavelength (Note 6)
24	41	"A" Vendor NAME ASCII Character	61	1E	Hex Byte of Laser Wavelength (Note 6)
25	49	"I" Vendor NAME ASCII Character	62		RESERVED
26	52	"R" Vendor NAME ASCII Character	63		Check sum code for ID fields 0-62 (Note 7)
27	20	" " Vendor NAME ASCII Character	64	00	
28	20	" " Vendor NAME ASCII Character	65	1A	Hardware TX_Disable, TX_Fault, & LOS
29	20	" " Vendor NAME ASCII Character	66	00	
30	20	" " Vendor NAME ASCII Character	67	00	
31	20	" " Vendor NAME ASCII Character	68-83		Serial Number, ASCII (Note 8)
32	20	" " Vendor NAME ASCII Character	84-91		Date Code (Note 9)
33	20	" " Vendor NAME ASCII Character	92	68	Diagnostic Monitoring Type
34	20	" " Vendor NAME ASCII Character	93	B0	Enhanced Options
35	20	" " Vendor NAME ASCII Character	94	05	SFF-8472 rev 11.0
36	00		95		Checksum for bytes 64-94 (Note 7)
			96-255	00	

Notes:

1. FC-PI speed 100 MBytes/sec is a serial bit rate of 1.0625 GBit/sec.
2. RESERVED
3. Link distance with 9/125µm cable at 1.25Gbps is 10km.
4. RESERVED.
5. Table 1, Part number options/extensions
6. Laser wavelength is represented in 16 unsigned bits. The hex representation of 1310 nm is 051E. The hex representation of 850nm is 0352.
7. Addresses 63 and 95 are checksums calculated per SFF-8472 and SFF-8074, and stored prior to product shipment.
8. Addresses 68-83 specify the module's ASCII serial number and will vary by unit.
9. Addresses 84-91 specify the module's ASCII date code and will vary according to manufactured date-code.

©2015 Glenair, Inc.

Table 9 Two-Wire interface ID: Data Fields – Address A2h

Byte # Decimal	Data Notes	Byte # Decimal	Data Notes	Byte # Decimal	Data Notes
0	Temp H Alarm MSB (Note 1)	26	TX Pwr L Alarm MSB (Note 4)	104	Rx Pavg MSB (Note 5)
1	Temp H Alarm LSB (Note 1)	27	TX Pwr L Alarm LSB (Note 4)	105	Rx Pavg LSB (Note 5)
2	Temp L Alarm MSB (Note 1)	28	TX Pwr H Warning MSB (Note 4)	106	Reserved
3	Temp L Alarm LSB (Note 1)	29	TX Pwr H Warning LSB (Note 4)	107	Reserved
4	Temp H Warning MSB (Note 1)	30	TX Pwr L Warning MSB (Note 4)	108	Reserved
5	Temp H Warning LSB (Note 1)	31	TX Pwr L Warning LSB (Note 4)	109	Reserved
6	Temp L Warning MSB (Note 1)	32	RX Pwr H Alarm MSB (Note 5)	110	Status/Control
7	Temp L Warning LSB (Note 1)	33	RX Pwr H Alarm LSB (Note 5)	111	Reserved
8	Vcc H Alarm MSB (Note 2)	34	RX Pwr L Alarm MSB (Note 5)	112	Flag Bits
9	Vcc H Alarm LSB (Note 2)	35	RX Pwr L Alarm LSB (Note 5)	113	Flag Bits
10	Vcc L Alarm MSB (Note 2)	36	RX Pwr H Warning MSB (Note 5)	114	Reserved
11	Vcc L Alarm LSB (Note 2)	37	RX Pwr H Warning LSB (Note 5)	115	Reserved
12	Vcc H Warning MSB (Note 2)	38	RX Pwr L Warning MSB (Note 5)	116	Flag Bits
13	Vcc H Warning LSB (Note 2)	39	RX Pwr L Warning LSB (Note 5)	117	Flag Bits
14	Vcc L Warning MSB (Note 2)	40-45	Reserved	118	Reserved
15	Vcc L Warning LSB (Note 2)	56-94	External Cal Constants (Note 4)	119	Reserved
16	Tx Bias H Alarm MSB (Note 3)	95	Checksum for bytes 0-94	120-122	Reserved
17	Tx Bias H Alarm LSB (Note 3)	96	Temperature MSB (Note 1)	123	Reserved
18	Tx Bias L Alarm MSB (Note 3)	97	Temperature LSB (Note 1)	124	Reserved
19	Tx Bias L Alarm LSB (Note 3)	98	Vcc MSB (Note 2)	125	Reserved
20	Tx Bias H Warning MSB (Note 3)	99	Vcc LSB (Note 2)	126	Reserved
21	Tx Bias H Warning LSB (Note 3)	100	TX Bias MSB (Note 3)	127	Reserved (Note 8)
22	Tx Bias L Warning MSB (Note 3)	101	TX Bias LSB (Note 3)	128-247	Customer Writable (Note 9)
23	Tx Bias L Warning LSB (Note 3)	102	TX Power MSB (Note 4)	248-255	Vendor Specific
24	TX Pwr H Alarm MSB (Note 4)	103	TX Power LSB (Note 4)		
25	TX Pwr H Alarm LSB (Note 4)				

Notes:

1. Temperature (Temp) is decoded as a 16 bit signed twos compliment integer in increments of 1/256 °C.
2. Supply voltage (VCC) is decoded as a 16 bit unsigned integer in increments of 100 µV.
3. Laser bias current (Tx Bias) is decoded as a 16 bit unsigned integer in increments of 2 µA.
4. Transmitted average optical power (Tx Pwr) is decoded as a 16 bit unsigned integer in increments of 0.1 µW.
5. Received average optical power (Rx Pwr) is decoded as a 16 bit unsigned integer in increments of 0.1 µW.
6. Bytes 55-94 are not intended from use but have been set to default values per SFF-8472.
7. Bytes 95 is a checksum calculated (per SFF-8472) and stored prior to product shipment.
8. Byte 127 accepts a write but performs no action (reserved legacy byte).
9. Bytes 128-247 are write enabled (customer writable).

©2015 Glenair, Inc.

TABLE 10 TRANSCEIVER DIGITAL DIAGNOSTIC MONITOR CHARACTERISTICS (WHEN APPLICABLE)

PARAMETER	SYMBOL	MIN.	UNITS	NOTES
Transceiver Internal Temperature Accuracy	TINT	±3.0	°C	Temperature is measured internal to the transceiver and is valid from -40°C to +85 °C case temperature
Transceiver internal Supply Voltage accuracy	VINT	±0.1	V	Supply voltage is measured internal to the transceiver and can, with less accuracy, be correlated to the voltage at the Vcc pin. Valid over 3.3V ±5%
Transmitter Laser DC Bias Current Accuracy	IINT	±10	%	
Transmitted Average Optical Output Power Accuracy	PT	±3.0	dB	Coupled into 50/125 mm MM fiber. Valid from -1dBm to -10dBm
Received Average Optical Input Power Accuracy	PR	±3.0	dB	Coupled from 50/125 mm MM fiber Valid from -24 dBm to - 1 dBm

©2015 Glenair, Inc.

ACCESSORIES

Fiber Optic Jumper Cables to support connection to Mil/Aerospace Connectors

KEY FEATURES:

- Jumper cable between Glenair Transceiver (end A) and Mil/Aero Connector termini (End B)
- Offered with either Multimode and Single Mode fibers

FIGURE 5
Fiber Optic Jumper Cable Assembly (see separate Glenair sales drawing FA02454 for details)

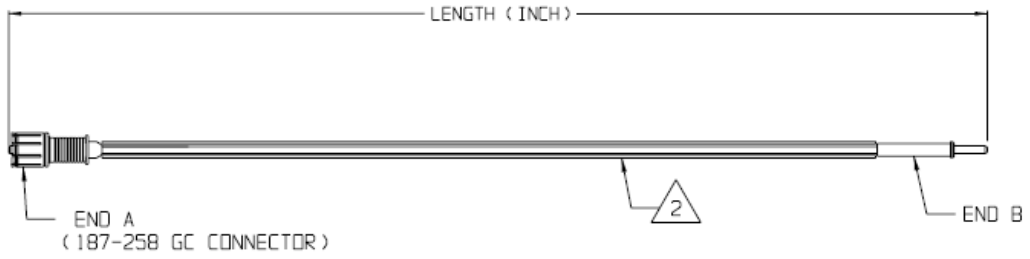

PCB Threaded Inserts, PN 059-0007

KEY FEATURES

- Simplifies installation of PCB mount transceivers eliminating the need for washers and nuts
- Soldered to PCB to eliminate need for handling nuts during assembly
- Existing Options to support PCB thickness from 0.03” to 0.92”
- Can support thicker PCB if required

EVALUATION Boards, PN 050-329 Include

- Manual with test block diagram, schematic and
- Evaluation board PCBA
- 2 fiber optic cables (~1m, 9 µm/125 µm, GC connector to LC connector)

