050-308
Size 8 Cavity Opto-Electronic Contact
1.25mm Terminus, 1300nm LED, 10Mbps – 200Mbps

Size 8 cavity opto-electronic contact for ARINC 801 connectors

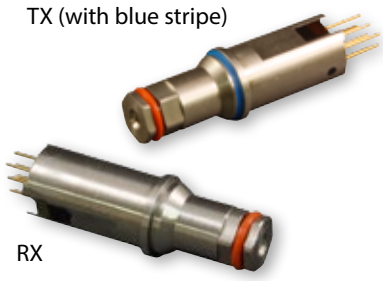

Patent Pending

Size 8 Cavity Opto-electronic contacts transmit and receive differential LVPECL electrical signals over Multimode fiber optic cable. Transmitters consist of an LED driver with a temperature compensation circuit to maintain optical power over the entire operating temperature range, and a 1300nm LED. Receivers consist of a PIN Photo Detector, a Transimpedance Amplifier with automatic gain control circuit, and a Limiting Amplifier. Differential output data signals are LVPECL. The transmitter has a Tx Disable pin to turn off transmitter output.

KEY FEATURES

- Front-release Size #8 OE converter designed for ARINC 600 and Glenair 050-304 D38999 type connectors
- ARINC 664, 801, 803, 804, and 818 standard Compliant
- Data rates from 10 Mbps – 200 Mbps
- Supports Fast and Gigabit Ethernet, AFDX, 100BASE-FX or other balanced communication protocols up to 200Mbps
- 100 ohms differential LVPECL inputs with Tx Disable
- Link distances up to 2 km with multimode 50/125µm or 62.5/125 µm fiber
- Single 3.3v power supply
- Mates with ARINC 801 1.25mm termini

How To Order

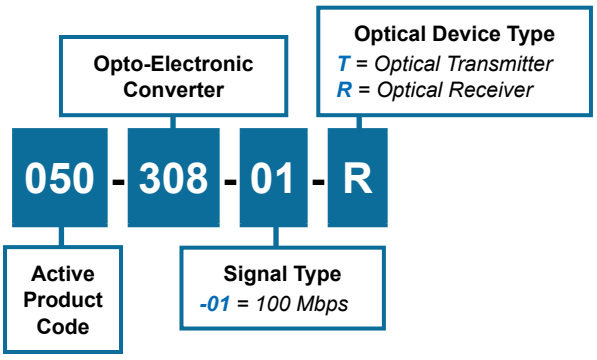

Material/Finish	
Shell	300CRES/Passivate or NM6
Seal	Silicone elastomer
Fiber ferrule & sleeve	Zirconia ceramic
PC tail contacts	Copper alloy/gold plated
PCB flex	FR4 & Polyimide
Solder type	RoHS compliant Sn95/Sb5 (232°C melting temp) & RoHS compliant Sn96.5/Ag3.0/Cu0.5 (217° melting)

© 2013 Glenair, Inc.

050-308
Size 8 Cavity Opto-Electronic Contact
1.25mm Terminus, 1300nm LED, 10Mbps – 200Mbps

Glenair®

Opto-Electronic Solutions

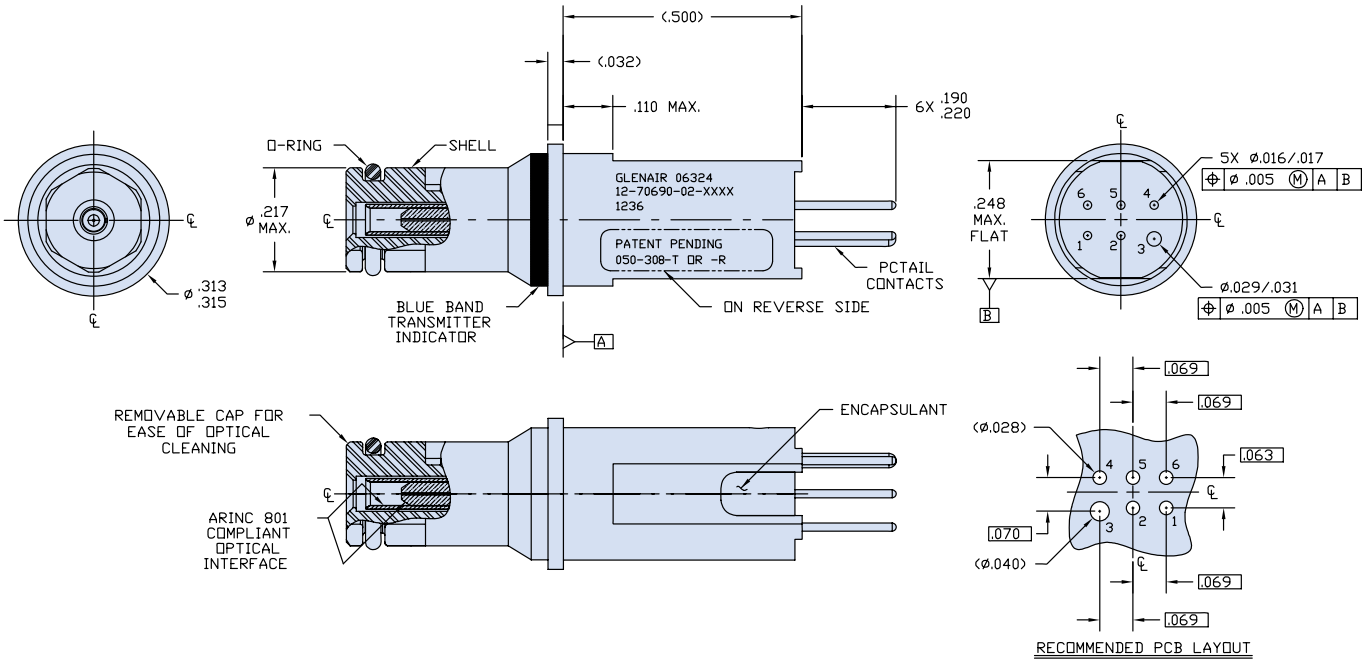

Component Replacement Part Numbers

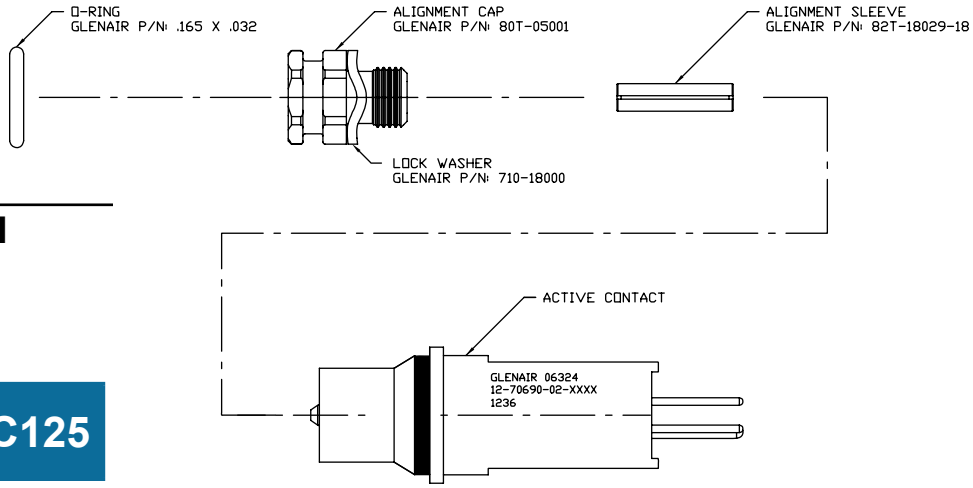

RECOMMENDED

Dry action cleaning tool



GCLT - C125

Notes

- Contact fits inside Radiall & Souriau ARINC 600 Q11 insert layout - Size 8 Quadrax front release/front removable cavity.
- When installed in ARINC 600 receptacle Q11 insert, this contact couples with LuxCis® fiber optic contact encased in ARINC 600 female Quadrax adapter.
- This contact, when installed in Radiall or Souriau ARINC 600 receptacle with RoHS compliant stand-off will meet applicable optical, mechanical and environmental performance requirements of ARINC 801 contact and ARINC 600 connector.
- Cap may be removed to provide access for fiber tip cleaning, or to replace alignment sleeve.
- Laser safety information: Class 1 21CFR1040.10
- Contact is RoHS compliant.
- Recommended PCB installation soldering contacts can withstand locally applied soldering heating of pins typical RoHS compliant solder temperature of 260°C and typical time of 10 seconds.

© 2013 Glenair, Inc.
Rev. Feb. 2013 U.S. CAGE Code 06324 Printed in U.S.A.

050-308
Size 8 Cavity Opto-Electronic Contact
1.25mm Terminus, 1300nm LED, 10Mbps – 200Mbps

Transmitter

Recommended Interface Circuit

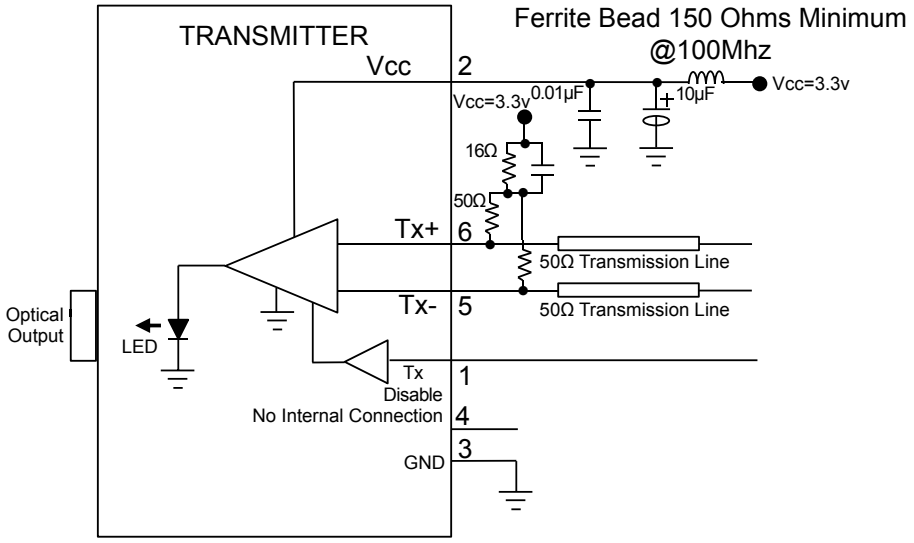

Absolute Max. Rating: Transmitter					
Parameter	**Symbol**	**Min.**	**Typ.**	**Max.**	**Unit**
Storage Temperature	T_S	-55		+100	°C
Supply Voltage	V_{CC}	-0.4		+4	V
Tx Disable Input Voltage	V Disable	-0.4		V_{CC}	V

Operating Conditions: Transmitter					
Parameter	**Symbol**	**Min.**	**Typ.**	**Max.**	**Unit**
Operating Temperature	T_{op}	-40		+85	°C
Supply Voltages	V_{CC}	3.14	3.3	3.46	V
Differential Input Voltage	V_{id}	500		2400	mVp-p
Power Supply Noise	VCC_{Ripple}			0.10	Vp-p

Transmitter Power Supply Current V_{CC} = 3.14 to 3.46V					
Parameter	**Symbol**	**Min.**	**Typ.**	**Max**	**Unit**
Supply Current	I_{CC}			130	mA

Transmitter: Example Optical Link Distances		
Protocol	**Fiber Type**	**Distance**
100BASE-FX	62.5/125µm, 200MHZ*Km 50/125µm, 500MHZ*Km	2K Meters

Optical Transmitter					
Parameter	**Symbol**	**Min.**	**Typ.**	**Max.**	**Unit**
Optical Output Power	P_{out}	-18.5		-14	dBm
Optical Wavelength	λ	1260		1380	nm
FWHM	Δλ		147		nm
Extinction Ratio -01 (125 Mbps)	Er	6.0	10		dB
Duty Cycle Distortion	DCD			1.0	ns

Electrical Pin Arrangement: Transmitter			
Pin	**Symbol**	**Description**	**Logic**
1	TX Disable	Transmit Disable (Input) Logic "1" Input→ Disable Transmitter Output	CMOS Internal pulldown
2	Vcc	Power Supply	
3	GND	Signal Ground	
4	NC	No Connection	N/A
5	TX-	Transmitter Inverted Data (Input)	LVPECL
6	TX+	Transmitter Non-Inverted Data (Input)	LVPECL

© 2013 Glenair, Inc.

Receiver

Recommended Interface Circuit

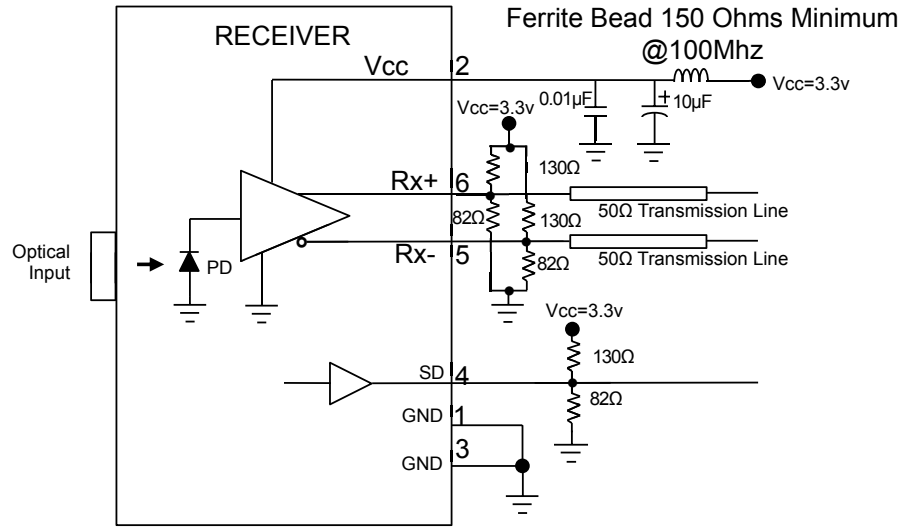

Absolute Max. Rating: Receiver					
Parameter	Symbol	Min.	Typ.	Max.	Unit
Storage Temperature	T_S	-55		+100	°C
Operating Voltage	V_{CC}	-0.4		+4	V

Operating Conditions: Receiver					
Parameter	Symbol	Min.	Typ.	Max.	Unit
Operating Temperature	T_{op}	-40		+85	°C
Supply Voltages	V_{CC}	3.14	3.3	3.46	V
Power Supply Noise	VCC_{Ripple}			0.10	Vp-p

Receiver Power Supply Current Vcc = 3.14 to 3.46V, Over Top					
Parameter	Symbol	Min.	Typ.	Max.	Unit
Supply Current	Icc			100	mA

Optical Receiver					
Parameter	Symbol	Min.	Typ.	Max.	Unit
Optical Sensitivity 125 Mbps ER=9dB, PRBS 2^7-1 BER=10^-10 -01 = 125 Mbps		-32			dBm
Optical Overload				-14	dBm
Optical Wavelength	λ_{Out}	1260		1380	nm
Differential Output Swing (P-P)	Vdiff	400		2000	mV
LOS De-Assert Level	SD			-33	dBm
SD Hysteresis	SD HYS	1.5			dB

Electrical Pin Arrangement - Receiver			
Pin	Symbol	Description	Logic
1	GND	Signal Ground	
2	Vcc	Power Supply	
3	GND	Signal Ground	
4	SD	Signal Detect	LVPECL
5	RX-	Receiver Inverted Data (Output)	LVPECL
6	RX+	Receiver Non-Inverter Data (Output)	LVPECL
Note: 62.5 µm fiber input			

© 2013 Glenair, Inc.