050-104
10/100/1000BASE-T to 1000BASE-SX/LX
Active Cable

ACTIVE CABLE MEDIA CONVERTER WITH SERIES 80 MIGHTY MOUSE CONNECTOR INTERFACE



10/100/1000BASE-T to 1000BASE-SX/LX10 Active Cable

Glenair 050-104 10/100/1000 BASE-T Ethernet Active Optical Cables employ state-of-the-art opto-electro-mechanical technology to provide effective harsh environment Ethernet interconnect solutions that enable much longer distances than served by electrical cables. The Active Optical Cables use rugged Mighty Mouse 805 Series electrical connectors at each end and incorporate electrical to optical (E/O) and optical to electrical (O/E) conversion, Voltage Regulation, Signal Conditioning with SERDES (Serialization/Deserialization) into the connector back shells. This provides the benefits of fiber optic cables while eliminating the need for customer to maintain and clean optical interconnects in harsh environments. Glenair Active Optical Cables are ideal for military, petrochemical, mining, industrial or utility applications where significant levels of shock, vibration and extreme temperature ranges are experienced.

Using 850 nm VCSEL technology, the SX version of the Active Optical Cable provides a bidirectional link that interfaces with 10/100/1000BASE-T at each end to transport the information over ruggedized multi-mode fiber up to 550m.

Using 1310nm Laser technology, the LX version of the Active Optical Cable provides a bidirectional link that interfaces with 10/100/1000BASE-T at each end to transport the information over ruggedized single-mode fiber up to 10km

KEY FEATURES

- IEEE 802.3-2005 Gigabit Ethernet standard compliant
- -40°C to +85°C operating temperature range
- Ideal for military and other harsh environment applications.
- Meets MIL-STD-810 mechanical shock and vibration
- Meets MIL-STD-1344 immersion resistance
- Up to 550 Meters for VCSEL 850nm version with Multimode fiber
- Up to 10 Kilometers for 1310nm laser version with Singlemode fiber
- Power supply operation from 5V to 30V
- IP67 in unmated condition
- Internally terminated optics—no optical connector cleaning

APPLICATIONS

- Military tactical communication systems
- Harsh environment telemetry or communications
- Satcom systems
- Industrial, mining, petrochemical facilities communications infrastructure

How To Order

Product Series		Signal Protocol (Table I)	J1 Polarization		Length C in Meters (0100 = 100m)	
050	- 104	- LX	NF	- A	A	- 0100
Ethernet Media Converter		Plating Code (Table II)			J2 Polarization	

© 2014 Glenair, Inc. Rev. Feb. 2014 U.S. CAGE Code 06324 Printed in U.S.A.

GLENAIR, INC. • 1211 AIR WAY • GLENDALE, CA 91201-2497 • 818-247-6000 • FAX 818-500-9912
www.glenair.com

E-Mail: sales@glenair.com

050-104
10/100/1000BASE-T to 1000BASE-SX/LX
Active Cable

Opto-Electronic Solutions

Table I: Signal Protocol		
Code	Name	Medium
SX	1000BASE-SX	Multimode Fiber 1m – 550m
LX	1000BASE-LX	Singlemode Fiber, 100m – 2km

Table II: Material And Finish		
SYM	Material	Finish Description
M	Aluminum	Electroless Nickel
MT		Nickel - PTFE
NF		Cadmium, Olive Drab
ZN		Zinc-Nickel, Olive Drab
ZNU		Zinc-Nickel, Black

Table IV: Dimensions			
Dash No.	A Max	B Max	C Max
-01	1.750 (44.45)	6.500 (165.10)	1m – 2km ± .5m

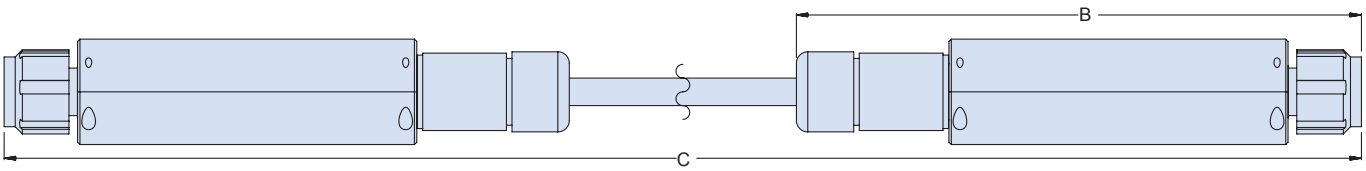

Block Diagram

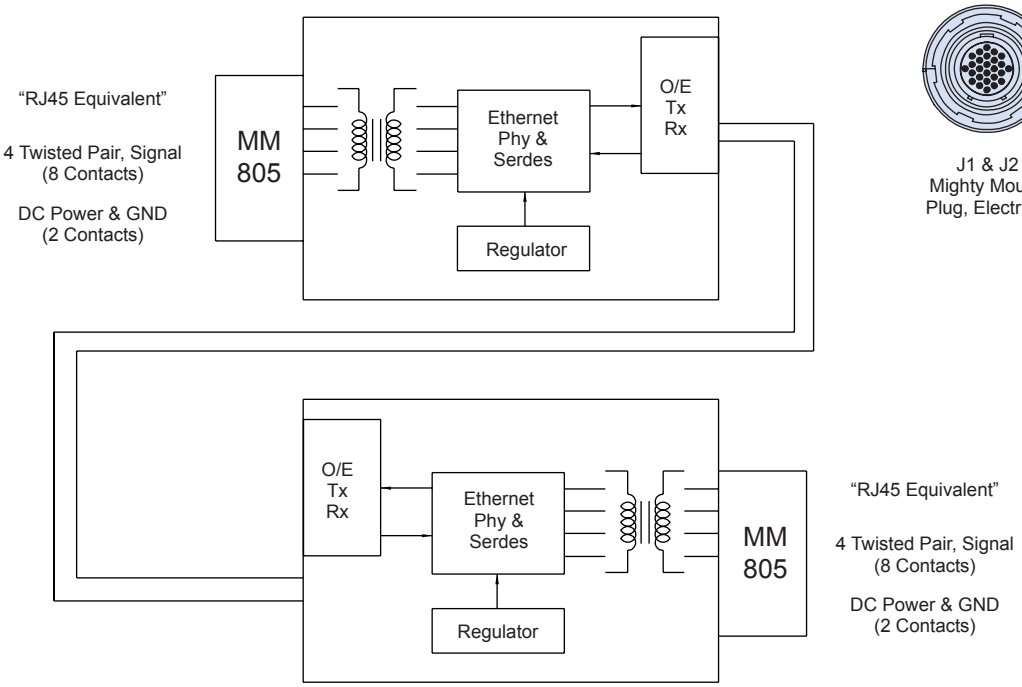

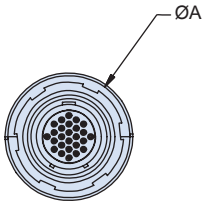

J1 & J2
Mighty Mouse
Plug, Electrical

Material and Finish
Connectors and Enclosures: See Table II

Assembly Notes
Interface connectors are designed to mate with any QPL manufacturer's MIL-DTL-38999 plug having the same insert arrangement and polarization; opposite contact gender. Mating connector and pin information contained in Table III
All connector cavities without defined contacts to be populated with appropriate sealing plug. MS27488 Type sealing plugs are recommended.

© 2014 Glenair, Inc.

050-104
10/100/1000BASE-T to 1000BASE-SX/LX
Active Cable

CONNECTOR CONFIGURATIONS

Table III: 050-104-SX/LX10 Connector Pin Out Definitions					
J1/J2 - Data Connector				Mating Connector for J1/J2	
Contact P/N: N/A				Contact P/N: N/A	
Pin	Name	Description	Equivalent RJ45 Pin # (for reference only)	Pin	Name
1	NC	No Connect	N/A	1	NC
2	NC	No Connect	N/A	2	NC
3	NC	No Connect	N/A	3	NC
4	NC	No Connect	N/A	4	NC
5	GND	Ground	N/A	5	GND
6	NC	No Connect	N/A	6	NC
7	NC	No Connect	N/A	7	NC
8	NC	No Connect	N/A	8	NC
9	NC	No Connect	N/A	9	NC
10	GND	Ground	N/A	10	GND
11	Vin	28V	N/A	11	Vin
12	NC	No Connect	N/A	12	NC
13	GND	Ground	N/A	13	GND
14	GND	Ground		14	GND
15	Vin	28V		15	Vin
16	MDA-	Data A (-)	2	16	MDA-
17	GND	Ground		17	GND
18	MDD+	Data D(+)	7	18	MDD+
19	MDB-	Data B (-)	6	19	MDD-
20	MDC+	Data C (+)	4	20	MDC+
21	MDA+	Data A(+)	1	21	MDA+
22	GND	Ground	N/A	22	GND
23	MDD-	Data D (-)	8	23	MDD-
24	MDB+	Data B (+)	3	24	MDB+
25	MDC-	Data C (-)	5	25	MDC-
26	GND	Ground		26	GND

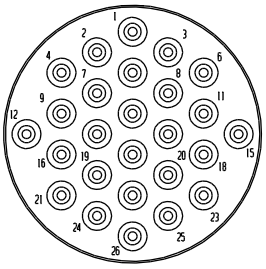

J2
Mighty Mouse
Plug, Electrical

J2 Mating Connector P/N Development

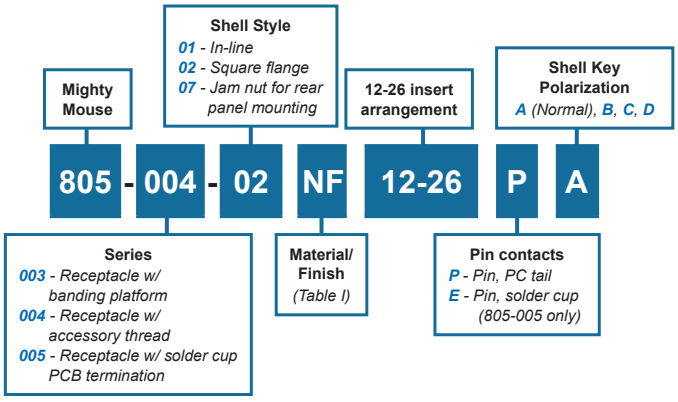

© 2014 Glenair, Inc.

RATINGS AND SPECIFICATIONS

Absolute Maximum Rating					
Parameter	Symbol	Min	Typ	Max	Unit
Storage Temperature	T_s	-55		+100	°C
Operating Voltage	V_{cc}	-0.4		+40	V

Operating Conditions					
Parameter	Symbol	Min	Typ	Max	Unit
Operating Temperature	T_{op}	-40		+85	°C
Supply Voltages	V_{cc}	5	12	36	V

Copper Link Distances		
Protocol	Cable Type	Distance
Ethernet (IEEE 802.3, 10BASE-T) Fast Ethernet (IEEE 802.3.u, 1000BASE-T) Gigabit Ethernet (IEEE 802.3ab, 1000BASE-T)	TIA/EIA-568-B Cat 5E	100 Meters

Power Supply Current @ 85 C Max. Operating Condition			
Parameter	Symbol	Max	Unit
Supply Voltage 5 V 12 V 24 V 28 V	I_{cc}	 630 230 110 95	mA

Military Specification Compliance			
Feature	Standard	Condition	Notes
Mechanical Shock	MIL-STD-810F	40g	6-9ms
Mechanical Vibration	MIL-STD-810F	30g RMS	18ms
ESD	MIL-STD-883	Class II	2200v
Mating Durability	MIL-STD-38999/20	500 Cycles	<0.5 db change
Flame Resistance	MIL-STD-1344	Method 1012	30 Seconds
Damp Heat	MIL-STD-1344	10 Cycles	24 Hours

© 2014 Glenair, Inc.