This document was generated on 06/07/2010

PLEASE CHECK WWW.MOLEX.COM FOR LATEST PART INFORMATION

Part Number: 0495181190
Status: Active
Description: 3.96mm (.156") Pitch Wire-to-Board Retainer, 11 Circuits, UL94V-2, Natural

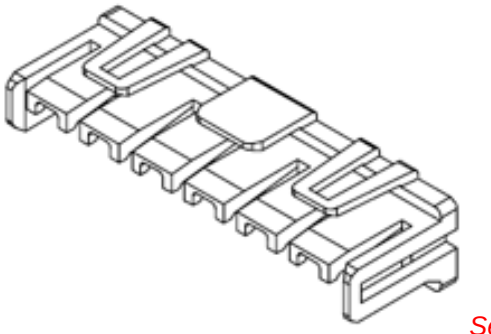

Series image - Reference only

Documents:
Drawing (PDF)
RoHS Certificate of Compliance (PDF)
Product Specification PS-49517-001 (PDF)

General

Product Family	Accessories
Series	49518
Component Type	Retainer
Product Name	TPA™ - Term Pos Assurance

Physical

Breakaway	No
Circuits (Loaded)	11
Circuits (maximum)	11
Color - Resin	Natural
Lock to Mating Part	Yes
Material - Resin	Nylon
Number of Rows	1
Packaging Type	Bag
Temperature Range - Operating	-40°C to +105°C

Electrical

Current - Maximum per Contact	7A

Material Info

Reference - Drawing Numbers

Packaging Specification	PK-49518-001
Product Specification	PS-49517-001
Sales Drawing	SD-49518-001

EU RoHS
ELV and RoHS Compliant
REACH SVHC
Contains SVHC: No
Halogen-Free Status
Halogen-Free

China RoHS

Need more information on product environmental compliance?

Email productcompliance@molex.com
For a multiple part number RoHS Certificate of Compliance, click here

Please visit the Contact Us section for any non-product compliance questions.

Search Parts in this Series
49518Series

Use With
49517 Wire-to-Board Female Housing

This document was generated on 06/07/2010

PLEASE CHECK WWW.MOLEX.COM FOR LATEST PART INFORMATION

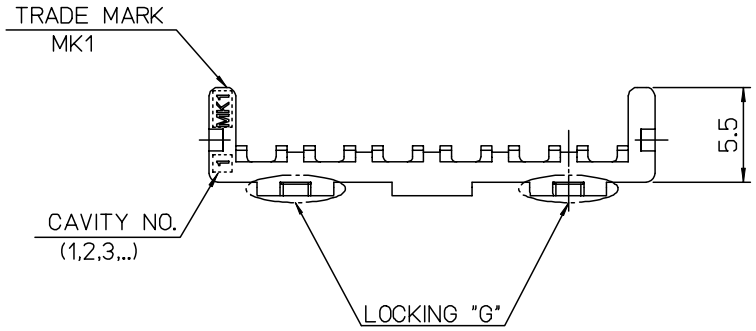

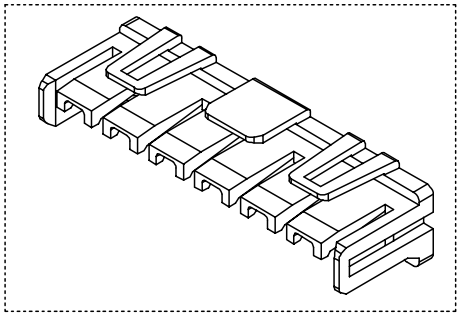

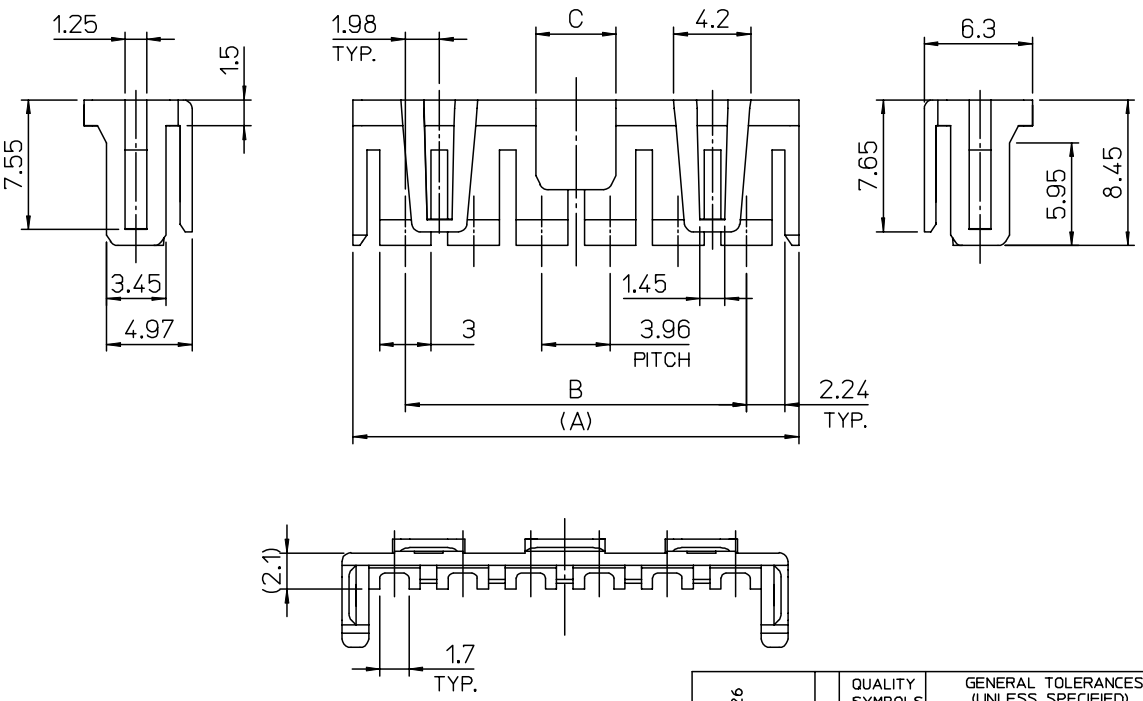

17.07	55.44	61.52	- 1590	15	LOCKING
	51.48	57.56	- 1490	14	
	47.52	53.6	- 1390	13	
	43.56	49.64	- 1290	12	
	39.60	45.68	- 1190	11	
	35.64	41.72	- 1090	10	
14.87	31.68	37.76	- 0990	9	
12.87	27.72	33.8	- 0890	8	
8.04	23.76	29.84	- 0790	7	
4.67	19.80	25.88	- 0690	6	WITHOUT LOCKING
	15.84	21.92	- 0590	5	
	11.88	17.96	- 0490	4	
	7.92	14	- 0390	3	
0.67	3.96	10.04	49518- 0290	2	
C	B	A	MATERIAL NO.	CKT'	TYPE"G"

NOTES

1. MATERIAL : POLYAMIDE66,UL94V-2
2. FINISH : NATURAL COLOR
3. MATED WITH HOUSING : 49517 SERIES

REV	DESCRIPTION	ECN NO.	DRWN	CHK	APPR
A	NEW RELEASED	KOR2006-0026	J.B.JIN 05/08/22	W.Y.YANG	C.W.LEE

QUALITY SYMBOLS
MAJOR
CRITICAL

GENERAL TOLERANCES: (UNLESS SPECIFIED)

	mm	INCH
4 PLACES	±0.	± -
3 PLACES	±0.	± -
2 PLACES	±0.25	± -
1 PLACE	±0.25	± -
ANGULAR: ±	°	

DRAFT WHERE APPLICABLE MUST REMAIN WITHIN DIMENSIONS

SCALE 1:1 | DESIGN UNITS ☒mm ☐INCH | THIRD ANGLE PROJECTION | DIMENSIONS: ☐mm/INCH ☐INCH/mm ☒mm ONLY | SHT | REV | REVISE ON CAD ONLY

DRAWN BY & DATE J.B.JIN 05/02/18

CHECKED BY & DATE W.Y.YANG 05/02/18

APPROVED BY & DATE C.W.LEE 05/02/18

TITLE: 3.96 W/B CONN.-TPA

MOLEX INCORPORATED

CAD FILENAME S49518AA.MI | MATERIAL NO. SEE CHART | DRAWING NO. SD-49518-001 | SHEET NO. 1 OF 1

THIS DRAWING CONTAINS INFORMATION THAT IS PROPRIETARY TO MOLEX INCORPORATED AND SHOULD NOT BE USED WITHOUT WRITTEN PERMISSION.

SIZE B

KOREA MX-A3

DWG. NO. SD-49518-001 | SIMILAR ITEM | PROJECT NO. | DO NOT SCALE DRAWING DIMENSION IN METRIC