This document was generated on 03/07/2018

PLEASE CHECK WWW.MOLEX.COM FOR LATEST PART INFORMATION

Part Number: 0480251090
Status: Active
Overview: Magnetic Modular Jacks
Description: Modular Jack, Right Angle, 10/100, with Integrated Magnetic and LED, 8/8, Lead-Free

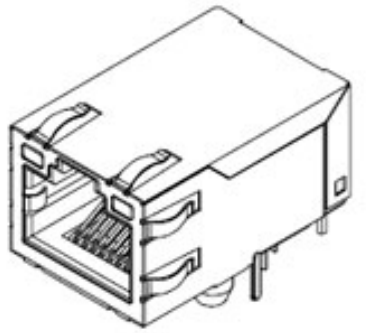

Series image - Reference only

Documents:

- 3D Model
- Drawing (PDF)
- Product Specification PS-48025-005-001 (PDF)
- Product Specification TS-48025-009-001 (PDF)
- Packaging Specification PK-48025-001 (PDF)
- RoHS Certificate of Compliance (PDF)

Agency Certification

CSA	LR19980
UL	E107635

General

Product Family	Modular Jacks/Plugs
Series	48025
Comments	With LED
Component Type	PCB Jack
Magnetic	Yes
Overview	Magnetic Modular Jacks
Performance Category	5, 5e
Power over Ethernet (PoE)	Non-PoE
Product Name	Magnetic Jack, Modular Jack 8/8, RJ45
UPC	822350848459

Physical

Boot Color	N/A
Color - Resin	Black
Durability (mating cycles max)	750
Flammability	94V-0
Inverted / Top Latch	Yes
Jack Height	13.30mm
Keying to Mating Part	Yes
Lightpipes/LEDs	LEDs
Material - Metal	Brass, Phosphor Bronze
Material - Plating Mating	Gold
Material - Plating Termination	Tin
Material - Resin	Nylon
Net Weight	7.560/g
Orientation	Right Angle (Side Entry)
PCB Locator	Yes
PCB Retention	Yes
PCB Thickness - Recommended	1.60mm
Packaging Type	Tray
Pitch - Mating Interface	1.02mm
Pitch - Termination Interface	1.27mm
Ports	1
Positions / Loaded Contacts	8/8
Surface Mount Compatible (SMC)	No
Temperature Range - Operating	-40°C to +70°C
Termination Interface: Style	Through Hole
Waterproof / Dustproof	No
Wire/Cable Type	N/A

Electrical

Current - Maximum per Contact	1.5A

EU ELV
Not Relevant

EU RoHS **China RoHS**
Compliant

REACH SVHC
Not Contained Per -ED/01/2018 (15 January 2018)

Halogen-Free Status
Not Low-Halogen

Need more information on product environmental compliance?

Email productcompliance@molex.com
Please visit the Contact Us section for any non-product compliance questions.

China ROHS	Green Image
ELV	Not Relevant
RoHS Phthalates	Not Contained

Search Parts in this Series
48025 Series

Mates With
FCC 68 Plugs

Grounding to PCB	Yes
Grounding to Panel	Panel Ground Tab
Shielded	Yes
Voltage - Maximum	150V AC (RMS)

Solder Process Data

Duration at Max. Process Temperature (seconds)	005
Lead-freeProcess Capability	REFLOW
Max. Cycles at Max. Process Temperature	001
Process Temperature max. C	245

Material Info

Reference - Drawing Numbers

Packaging Specification	PK-48025-001
Product Specification	PS-48025-005-001, TS-48025-009-001
Sales Drawing	SD-48025-009-001

This document was generated on 03/07/2018

PLEASE CHECK WWW.MOLEX.COM FOR LATEST PART INFORMATION