This document was generated on 05/19/2010

PLEASE CHECK WWW.MOLEX.COM FOR LATEST PART INFORMATION

Part Number: 0473622020
Status: Active
Overview: serial_ata_127_host_receptacles
Description: 1.27mm (.050") Pitch Combo SATA Cable Connector, Right Angle Type, with Arris on bottom surface, with bumps, Gold(Au) Flash Plating, 22 Circuits, Lead Free

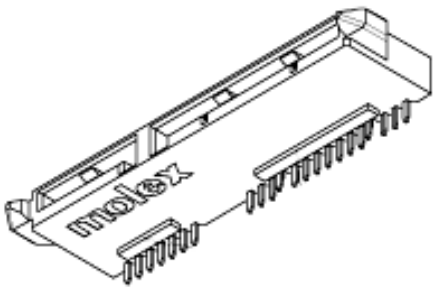

Series image - Reference only

Documents:

- 3D Model
- Drawing (PDF)
- Product Specification PS-47362-001 (PDF)
- RoHS Certificate of Compliance (PDF)

General

Product Family	I/O Connectors
Series	47362
Application	Wire-to-Board
Comments	Right Angle Type
Component Type	Receptacle
Overview	serial_ata_127_host_receptacles
Product Name	Serial ATA
Type	N/A

Physical

Boot Color	N/A
Circuits (Loaded)	22
Circuits (maximum)	22
Circuits Detail	Signal 7, Power 15
Color - Resin	Black
Durability (mating cycles max)	50
Gender	Receptacle
Keying to Mating Part	Yes
Lock to Mating Part	Yes
Material - Metal	Copper Alloy
Material - Plating Mating	Gold
Material - Plating Termination	Tin
Number of Rows	1
Orientation	Right Angle
PCB Locator	No
PCB Retention	None
PCB Thickness Recommended (in)	0.039 In
PCB Thickness Recommended (mm)	1.00 mm
Packaging Type	Tray
Panel Mount	Yes
Pitch - Mating Interface (in)	0.050 In
Pitch - Mating Interface (mm)	1.27 mm
Pitch - Term. Interface (in)	0.050 In
Pitch - Term. Interface (mm)	1.27 mm
Plating min: Mating (µin)	2
Plating min: Mating (µm)	0.05
Plating min: Termination (µin)	50
Plating min: Termination (µm)	1.27
Polarized to Mating Part	Yes
Polarized to PCB	Yes
Ports	2
Temperature Range - Operating	-35°C to +85°C
Termination Interface: Style	Through Hole
Waterproof / Dustproof	No
Wire Size AWG	N/A

EU RoHS
ELV and RoHS Compliant
REACH SVHC
Not Reviewed
Halogen-Free Status
Not Reviewed

China RoHS

Need more information on product environmental compliance?

Email productcompliance@molex.com
For a multiple part number RoHS Certificate of Compliance, click here

Please visit the Contact Us section for any non-product compliance questions.

Search Parts in this Series
47362Series

Electrical

Current - Maximum per Contact	1.5A
Voltage - Maximum	15V DC

Material Info

Reference - Drawing Numbers

Packaging Specification	PK-47362-001
Product Specification	PS-47362-001
Sales Drawing	SD-47362-100

This document was generated on 05/19/2010

PLEASE CHECK WWW.MOLEX.COM FOR LATEST PART INFORMATION

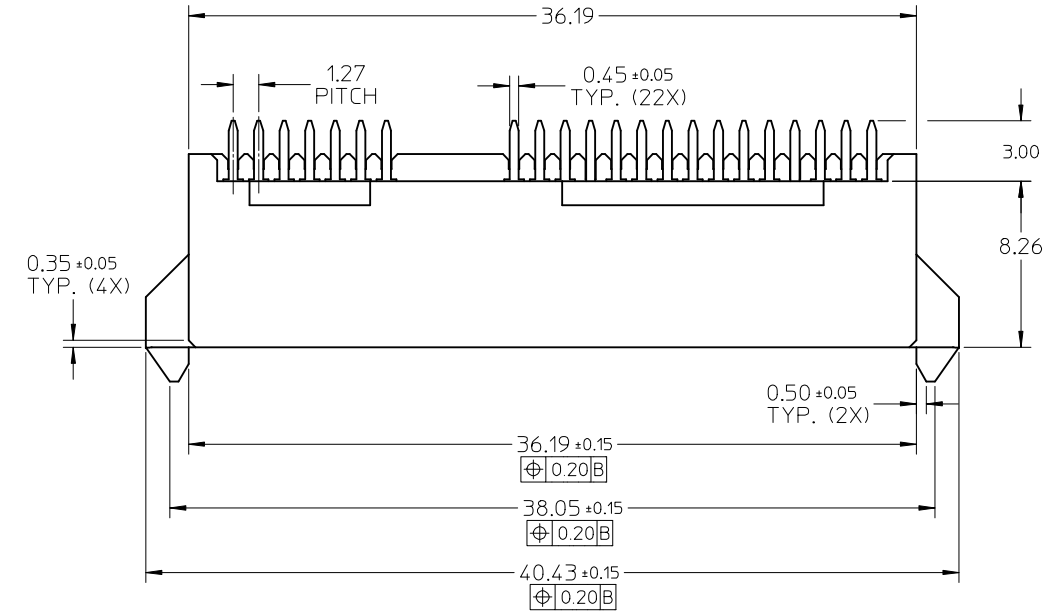

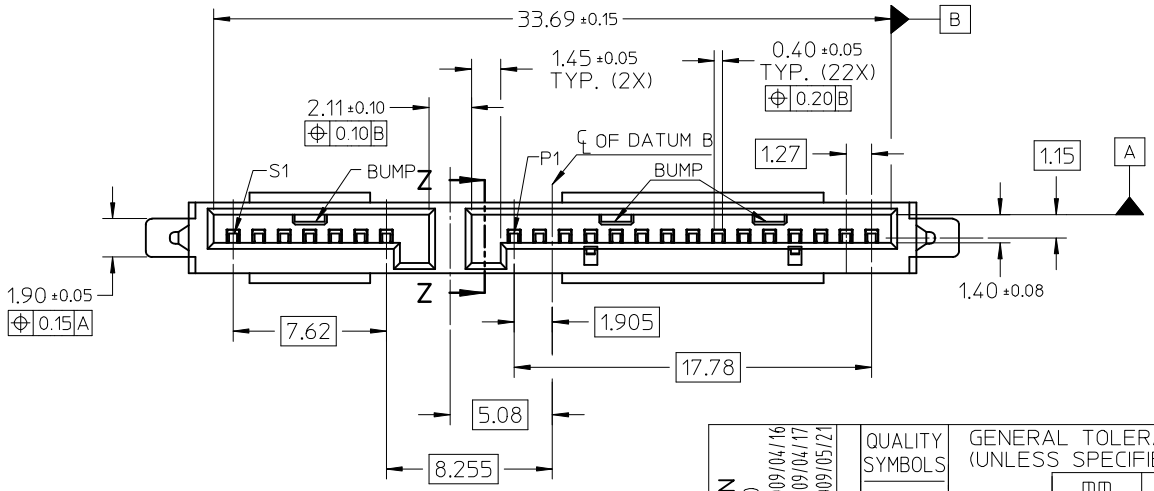

NOTES:

1. MATERIAL:
   HOUSING: THERMAL PLASTIC, GLASS FILLED, UL94V-0, COLOR: BLACK.
   TERMINAL: COPPER ALLOY, THICKNESS=0.25MM.
2. TERMINAL PLATING:
   CONTACT AREA: GOLD PLATED, SEE TABLE.
   SOLDER AREA: PURE TIN, THICKNESS=1.27 MICRONS MINIMUM.
   UNDER PLATE: NICKLE, THICKNESS=1.27 MICRONS MINIMUM.
3. PRODUCT SPECIFICATION: REFER TO PS-47362-001.
4. PACKAGING METHOD: REFER TO PK-47362-001.
5. PRODUCT COMPLIANT TO RoHS DIRECTIVE 2002/95/EC AND ELV DIRECTIVE 2000/53/EC

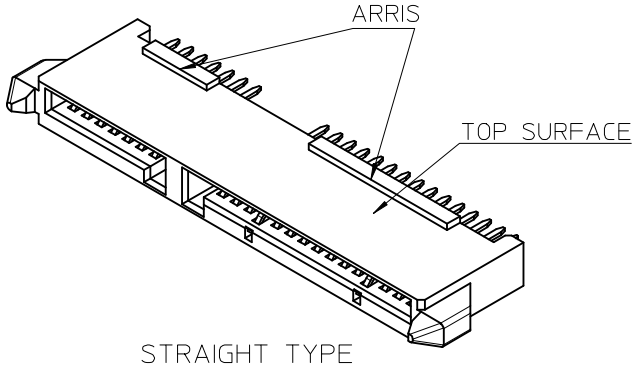

STRAIGHT TYPE

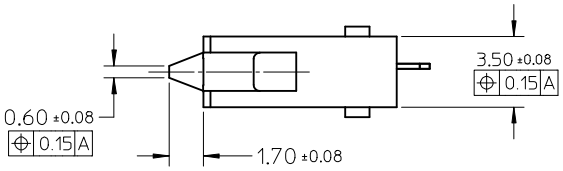

REV	DESCRIPTION	
H	ADD NEW OPTION	2009/04/16
	EC NO: SH2009-0500	2009/04/17
	DRWN:XJSONG	2009/05/21
	CH'KD:XJSONG	
	APPR:HWWANG	

QUALITY SYMBOLS
▼=0
Ⓒ▽=0

GENERAL TOLERANCES (UNLESS SPECIFIED)

	mm	INCH
4 PLACES	± ---	± ---
3 PLACES	± ---	± ---
2 PLACES	± 0.2	± ---
1 PLACE	± 0.25	± ---
ANGULAR ± 3 °		

DRAFT WHERE APPLICABLE MUST REMAIN WITHIN DIMENSIONS

DIMENSION STYLE	MM ONLY
SCALE	4:1
DESIGN UNITS	METRIC
	THIRD ANGLE PROJECTION
DRAWN BY	BCHEN26
DATE	2005/12/05
CHECKED BY	DIXON
DATE	2005/12/05
APPROVED BY	GRATE
DATE	2005/12/05
MATERIAL NO.	SEE SHEET4
TITLE	COMBO SATA RECEPTACLE CABLE END
	MOLEX INCORPORATED
DOCUMENT NO.	SD-47362-100
SHEET NO.	1 OF 4
SIZE	A3

THIS DRAWING CONTAINS INFORMATION THAT IS PROPRIETARY TO MOLEX INCORPORATED AND SHOULD NOT BE USED WITHOUT WRITTEN PERMISSION

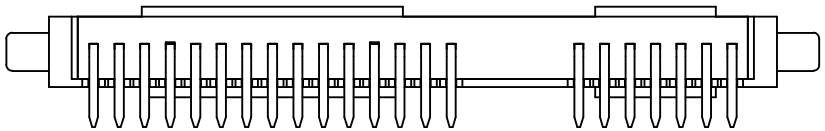

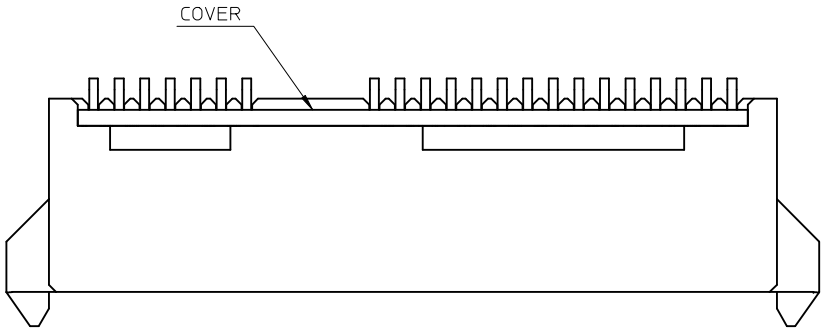

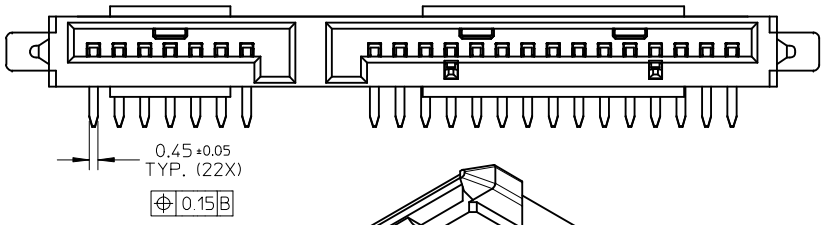

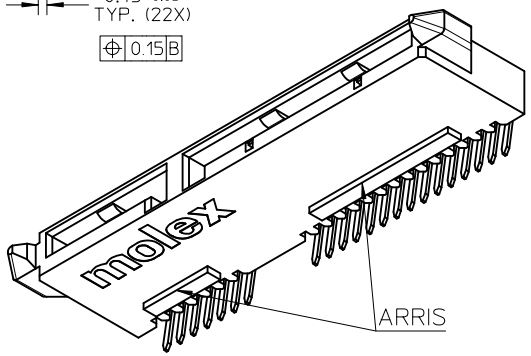

RIGHT ANGLE(90 DEGREE) TYPE

OTHER DIMENSIONS REFER TO STRAIGHT TYPE

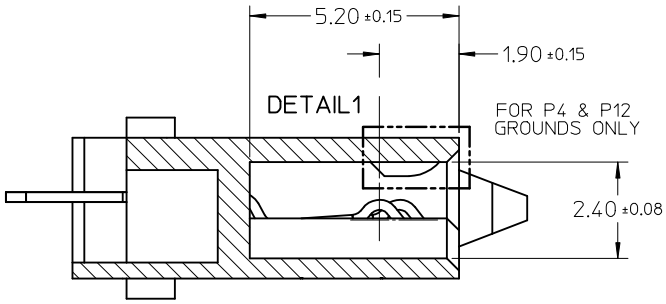

SECTION Z-Z

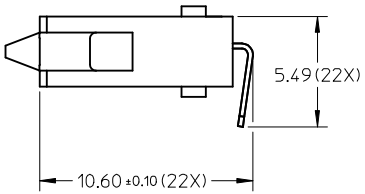

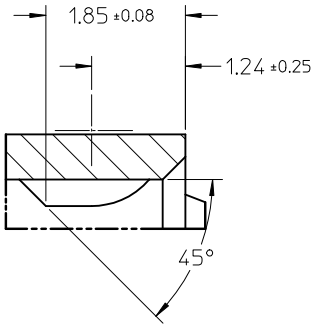

DETAIL1

SEE SHEET1			
EC NO: SH2009-0500	2009/04/16		
DRWN:XJSONG	2009/04/17		
CH'KD:XJSONG	2009/05/21		
APPR:HWWANG			
DESCRIPTION			
REV			

QUALITY SYMBOLS
▼=0
Ⓒ=0

GENERAL TOLERANCES (UNLESS SPECIFIED)

	mm	INCH
4 PLACES	± ---	± ---
3 PLACES	± ---	± ---
2 PLACES	± 0.2	± ---
1 PLACE	± 0.25	± ---
ANGULAR ± 3 °		

DRAFT WHERE APPLICABLE MUST REMAIN WITHIN DIMENSIONS

DIMENSION STYLE	MM ONLY
SCALE	4:1
DESIGN UNITS	METRIC
	THIRD ANGLE PROJECTION
DRAWN BY	BCHEN26
DATE	2005/12/05
CHECKED BY	DIXON
DATE	2005/12/05
APPROVED BY	GRATE
DATE	2005/12/05
MATERIAL NO.	SEE SHEET4
TITLE	COMBO SATA RECEPTACLE CABLE END
	MOLEX INCORPORATED
DOCUMENT NO.	SD-47362-100
SHEET NO.	2 OF 4
SIZE	A3

THIS DRAWING CONTAINS INFORMATION THAT IS PROPRIETARY TO MOLEX INCORPORATED AND SHOULD NOT BE USED WITHOUT WRITTEN PERMISSION

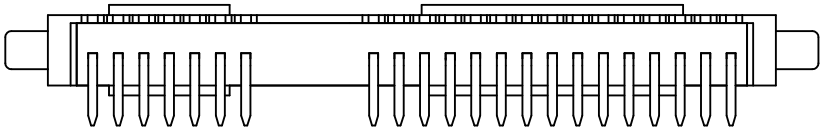

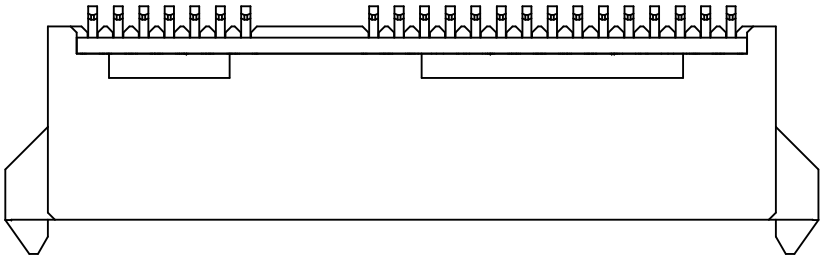

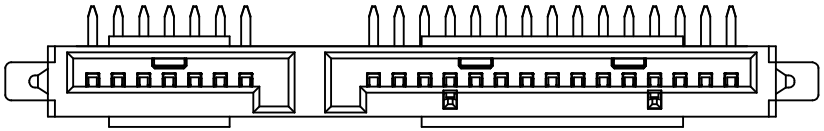

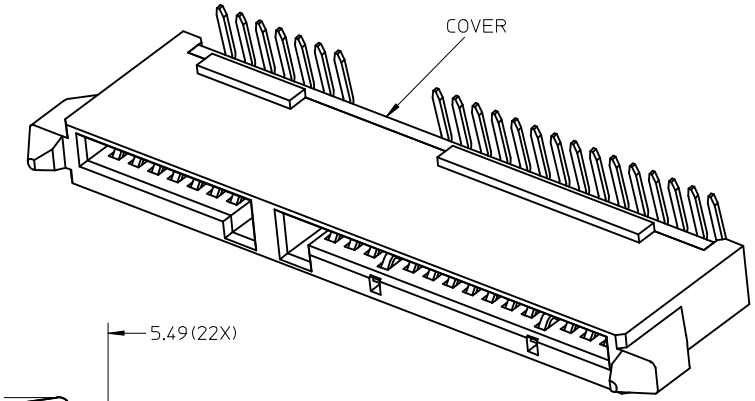

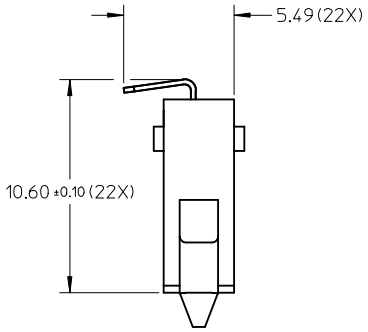

RIGHT ANGLE(270 DEGREE) TYPE
OTHER DIMENSIONS REFER TO RIGHT ANGLE(90 DEGREE) TYPE

SEE SHEET1 EC NO: SH2009-0500 DRWN:XJSONG 2009/04/16 CH'KD:XJSONG 2009/04/17 APPR:HWWANG 2009/05/21	QUALITY SYMBOLS ▼=0 C=0	GENERAL TOLERANCES (UNLESS SPECIFIED)		DIMENSION STYLE MM ONLY	SCALE 4:1	DESIGN UNITS METRIC	THIRD ANGLE PROJECTION
			mm / INCH	DRAWN BY BCHEN26 / DATE 2005/12/05	TITLE COMBO SATA RECEPTACLE CABLE END		
		4 PLACES	± --- / ± ---	CHECKED BY DIXON / DATE 2005/12/05			
		3 PLACES	± --- / ± ---	APPROVED BY GRATE / DATE 2005/12/05	molex MOLEX INCORPORATED		
		2 PLACES	± 0.2 / ± ---	MATERIAL NO. SEE SHEET4	DOCUMENT NO. SD-47362-100	SHEET NO. 3 OF 4	
		1 PLACE	± 0.25 / ± ---				
		ANGULAR ± 3 °					
H	REV / DESCRIPTION	DRAFT WHERE APPLICABLE MUST REMAIN WITHIN DIMENSIONS		SIZE A3	THIS DRAWING CONTAINS INFORMATION THAT IS PROPRIETARY TO MOLEX INCORPORATED AND SHOULD NOT BE USED WITHOUT WRITTEN PERMISSION		

tb_frame_A3_P_AM_T
Rev. E 2006/04/15

P/N	PLATE TYPE	REMARK	STRAIGHT OR R/A
47362-1000	GOLD FLASH		
47362-1001	GOLD PLATED 0.76 MICRONS MIN.	WITH ARRIS ON BOTH SURFACE	
47362-1002	GOLD PLATED 0.38 MICRONS MIN.	WITH BUMPS	
47362-1010	GOLD FLASH		
47362-1011	GOLD PLATED 0.76 MICRONS MIN.	WITH ARRIS ON TOP SURFACE	
47362-1012	GOLD PLATED 0.38 MICRONS MIN.	WITH BUMPS	STRAIGHT TYPE
47362-1020	GOLD FLASH		
47362-1021	GOLD PLATED 0.76 MICRONS MIN.	WITH ARRIS ON BOTTOM SURFACE	
47362-1022	GOLD PLATED 0.38 MICRONS MIN.	WITH BUMPS	
47362-1030	GOLD FLASH		
47362-1031	GOLD PLATED 0.76 MICRONS MIN.	WITHOUT ARRIS	
47362-1032	GOLD PLATED 0.38 MICRONS MIN.	WITH BUMPS	
47362-2000	GOLD FLASH		
47362-2001	GOLD PLATED 0.76 MICRONS MIN.	WITH ARRIS ON BOTH SURFACE	
47362-2002	GOLD PLATED 0.38 MICRONS MIN.	WITH BUMPS,WITH COVER	
47362-2010	GOLD FLASH		
47362-2011	GOLD PLATED 0.76 MICRONS MIN.	WITH ARRIS ON TOP SURFACE	
47362-2012	GOLD PLATED 0.38 MICRONS MIN.	WITH BUMPS,WITH COVER	
47362-2020	GOLD FLASH		RIGHT ANGLE TYPE
47362-2021	GOLD PLATED 0.76 MICRONS MIN.	WITH ARRIS ON BOTTOM SURFACE	(90 DEGREE)
47362-2022	GOLD PLATED 0.38 MICRONS MIN.	WITH BUMPS,WITH COVER	
47362-2030	GOLD FLASH		
47362-2031	GOLD PLATED 0.76 MICRONS MIN.	WITHOUT ARRIS	
47362-2032	GOLD PLATED 0.38 MICRONS MIN.	WITH BUMPS,WITH COVER	
47362-1003	GOLD PLATED 0.38 MICRONS MIN.	WITH ARRIS ON BOTH SURFACE WITHOUT BUMPS	STRAIGHT TYPE
47362-1082	GOLD PLATED 0.38 MICRONS MIN.	WITH ARRIS ON BOTH SURFACE WITH BUMPS	STRAIGHT TYPE

P/N	PLATE TYPE	REMARK	STRAIGHT OR R/A
47362-3000	GOLD FLASH		
47362-3001	GOLD PLATED 0.76 MICRONS MIN.	WITH ARRIS ON BOTH SURFACE	
47362-3002	GOLD PLATED 0.38 MICRONS MIN.	WITH BUMPS,WITH COVER	
47362-3010	GOLD FLASH		
47362-3011	GOLD PLATED 0.76 MICRONS MIN.	WITH ARRIS ON TOP SURFACE	
47362-3012	GOLD PLATED 0.38 MICRONS MIN.	WITH BUMPS,WITH COVER	RIGHT ANGLE TYPE
47362-3020	GOLD FLASH		(270 DEGREE)
47362-3021	GOLD PLATED 0.76 MICRONS MIN.	WITH ARRIS ON BOTTOM SURFACE	
47362-3022	GOLD PLATED 0.38 MICRONS MIN.	WITH BUMPS,WITH COVER	
47362-3030	GOLD FLASH		
47362-3031	GOLD PLATED 0.76 MICRONS MIN.	WITHOUT ARRIS	
47362-3032	GOLD PLATED 0.38 MICRONS MIN.	WITH BUMPS,WITH COVER	

SEE SHEET1
EC NO: SH2009-0500 2009/04/16
DRWN:XJSONG 2009/04/17
CH'KD:XJSONG 2009/05/21
APPR:HWANG
DESCRIPTION
REV

QUALITY SYMBOLS
▼=0
Ⓒ▽=0

GENERAL TOLERANCES (UNLESS SPECIFIED)

	mm	INCH
4 PLACES	± ---	± ---
3 PLACES	± ---	± ---
2 PLACES	± 0.2	± ---
1 PLACE	± 0.25	± ---
ANGULAR ± 3 °		

DRAFT WHERE APPLICABLE MUST REMAIN WITHIN DIMENSIONS

DIMENSION STYLE: MM ONLY
SCALE: 4:1
DESIGN UNITS: METRIC
THIRD ANGLE PROJECTION

DRAWN BY: BCHEN26 DATE: 2005/12/05
CHECKED BY: DIXON DATE: 2005/12/05
APPROVED BY: GRATE DATE: 2005/12/05

TITLE: COMBO SATA RECEPTACLE CABLE END

MOLEX INCORPORATED

MATERIAL NO.: SEE TABLE
DOCUMENT NO.: SD-47362-100
SHEET NO.: 4 OF 4
SIZE: A3

THIS DRAWING CONTAINS INFORMATION THAT IS PROPRIETARY TO MOLEX INCORPORATED AND SHOULD NOT BE USED WITHOUT WRITTEN PERMISSION