P/N 46113-0241 SHOWN

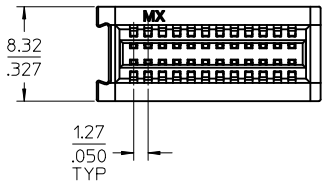

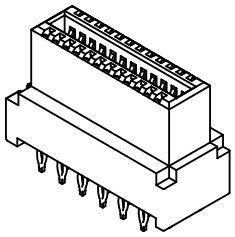

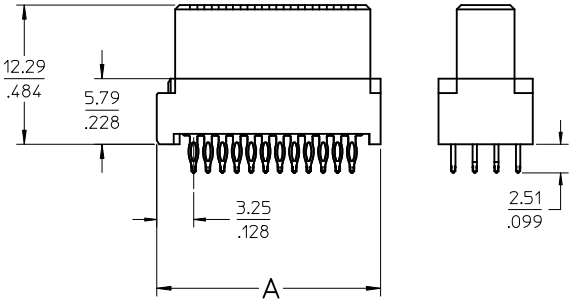

NOTES:
1. MATERIAL: HOUSING: LCP, 94-V0, COLOR: BLACK.
   POWER CONTACTS: COPPER ALLOY.
   SIGNAL CONTACTS: MODIFIED TIN BRASS.
2. FINISH: SELECT GOLD - 0.75 µM/30 µ INCHES
   SELECTED TIN - 1.91 µM/75 µ INCHES
   OR SELECTED TIN-LEAD - 1.91 µM/75 µ INCHES
   BOTH OVER NICKEL - 1.25 µM/50 µ INCHES
3. PARTS ARE RoHS COMPLIANT.
4. MATES TO MOLEX P/N 45985-SERIES OR
   EDGE CARD 1.57/.062.
5. PRODUCT SPECIFICATION PS-46114-001.
6. PACKAGING: PER PK-46114-003.

POWER HOUSING ASSY W/ INTERLOCK

NO OF CKT	MATERIAL NUMBER	COMPLIANT PIN PLATING	DIM A	DIM B SEE SHT 3	DIM C SEE SHT 3
12	46113-0121	TIN	12.13/.478	12.65/.498	3.51/.138
	46113-0125	TIN-LEAD			
16	46113-0161	TIN	14.67/.578	15.19/.598	
	46113-0165	TIN-LEAD			
20	46113-0201	TIN	17.21/.678	17.73/.698	
	46113-0205	TIN-LEAD			
24	46113-0241	TIN	19.75/.778	20.27/.798	
	46113-0245	TIN-LEAD			
28	46113-0281	TIN	22.29/.878	22.81/.898	
	46113-0285	TIN-LEAD			
32	46113-0321	TIN	24.83/.978	25.35/.998	
	46113-0325	TIN-LEAD			
36	46113-0361	TIN	27.37/1.078	27.89/1.098	
	46113-0365	TIN-LEAD			
40	46113-0401	TIN	29.91/1.178	30.43/1.198	
	46113-0405	TIN-LEAD			

P/N 46113-0243 SHOWN

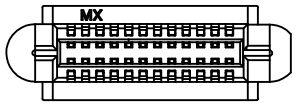

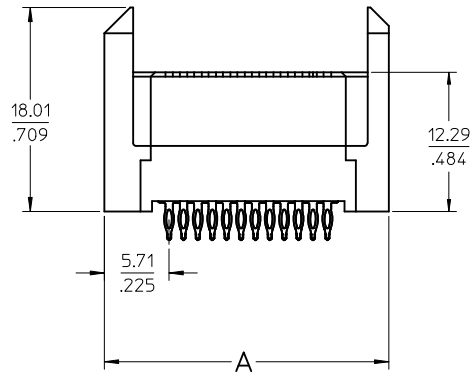

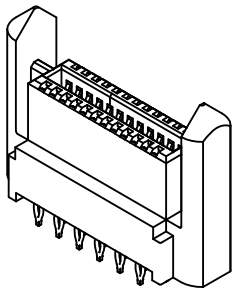

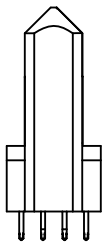

POWER HOUSING ASSY WITH (2) GUIDES

NO OF CKT	MATERIAL NUMBER	COMPLIANT PIN PLATING	DIM A	DIM B SEE SHT 3	DIM C SEE SHT 3
12	46113-0123	TIN	17.49/.689	18.01/.709	5.97/.235
	46113-0126	TIN-LEAD			
16	46113-0163	TIN	20.03/.789	20.55/.809	
	46113-0166	TIN-LEAD			
20	46113-0203	TIN	22.57/.889	25.63/1.009	
	46113-0206	TIN-LEAD			
24	46113-0243	TIN	25.11/.989	25.88/1.019	
	46113-0246	TIN-LEAD			
28	46113-0283	TIN	27.65/1.089	28.17/1.109	
	46113-0286	TIN-LEAD			
32	46113-0323	TIN	30.19/1.189	30.71/1.209	
	46113-0326	TIN-LEAD			
36	46113-0363	TIN	32.73/1.289	33.25/1.309	
	46113-0366	TIN-LEAD			
40	46113-0403	TIN	35.27/1.389	35.79/1.409	
	46113-0406	TIN-LEAD			

PRESS-FIT ADDED
EC NO: UCP2010-1199
DRWN: MKARADIMAS 2009/11/30
CH'KD: 2009/12/03
APPR: JCOMERCI 2009/12/08
DESCRIPTION
B2
REV

GENERAL TOLERANCES (UNLESS SPECIFIED)

	mm	INCH
4 PLACES	± ---	± ---
3 PLACES	± ---	± .010
2 PLACES	± 0.25	±
1 PLACE	±	± ---
ANGULAR ±1/2°		

DRAFT WHERE APPLICABLE MUST REMAIN WITHIN DIMENSIONS

DIMENSION STYLE: MM/IN
SCALE: 2:1
DESIGN UNITS: METRIC
THIRD ANGLE PROJECTION

		DATE
DRAWN BY	MKARADIMAS	2008/03/10
CHECKED BY	MBANDURA	2008/03/14
APPROVED BY	JCOMERCI	2009/12/03

TITLE: LPH VERTICAL RECEPTACLE SIGNAL ASSEMBLY 12 CKT-40 CKT, PRESS-FIT (B2)

molex MOLEX INCORPORATED

MATERIAL NO.: SEE CHART
DOCUMENT NO.: SD-46113-200
SHEET NO.: 1 OF 2
SIZE: C

THIS DRAWING CONTAINS INFORMATION THAT IS PROPRIETARY TO MOLEX INCORPORATED AND SHOULD NOT BE USED WITHOUT WRITTEN PERMISSION

SIGNAL 24 CKT

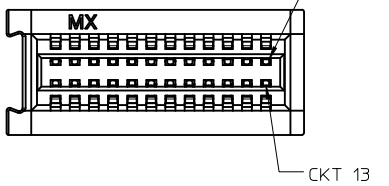

NO OF SIGNAL	DIM. D
12	8.00/.315
16	10.54/.415
20	13.08/.515
24	15.62/.615
28	18.16/.715
32	20.70/.815
36	23.24/.915
40	25.78/1.015

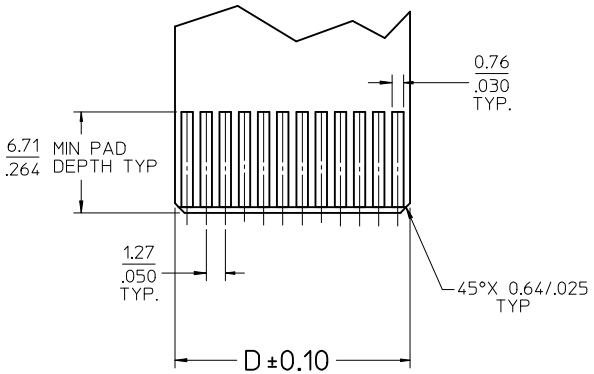

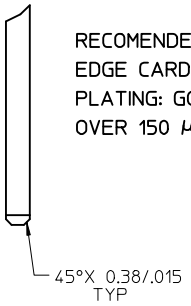

RECOMENDED EDGE CARD LAYOUT
EDGE CARD THICKNESS: 1.57/.062
PLATING: GOLD 30 μ INCHES MIN.
OVER 150 μ INCHES NICKEL.

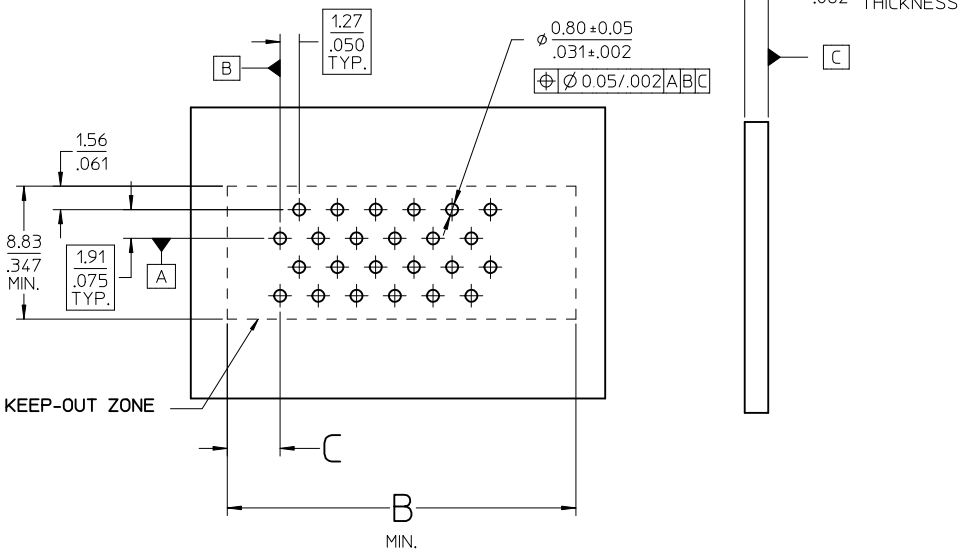

PCB COMPONENT SIDE

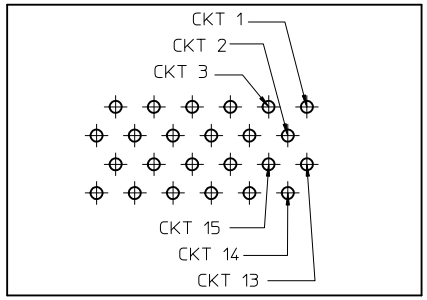

PCB LAYOUT: COMPNENT SIDE
SEE SHT 1 FOR DIMENSIONS

SEE SHT 1
EC NO: UCP2010-1199 2009/11/30
DRWN: MKARADIMAS 2009/12/03
CHKD:
APPR: JCOMERCI 2009/12/08
DESCRIPTION
B2
REV

GENERAL TOLERANCES (UNLESS SPECIFIED)

	mm	INCH
4 PLACES	± ---	± ---
3 PLACES	± ---	± .010
2 PLACES	± 0.25	±
1 PLACE	±	± ---
ANGULAR ±1/2°		

DRAFT WHERE APPLICABLE MUST REMAIN WITHIN DIMENSIONS

DIMENSION STYLE: MM/IN
SCALE: 4:1
DESIGN UNITS: METRIC
THIRD ANGLE PROJECTION

DRAWN BY: MKARADIMAS DATE: 2008/03/10
CHECKED BY: MBANDURA DATE: 2008/03/14
APPROVED BY: JCOMERCI DATE: 2009/12/03

TITLE: LPH VERTICAL RECEPTACLE SIGNAL ASSEMBLY 12 CKT-40 CKT, PRESS-FIT

MOLEX INCORPORATED

MATERIAL NO.: SEE CHART
DOCUMENT NO.: SD-46113-200
SHEET NO.: 2 OF 2
SIZE: C

THIS DRAWING CONTAINS INFORMATION THAT IS PROPRIETARY TO MOLEX INCORPORATED AND SHOULD NOT BE USED WITHOUT WRITTEN PERMISSION