RoHS Pb HF 441 Series – 0603 High I²t Fuse

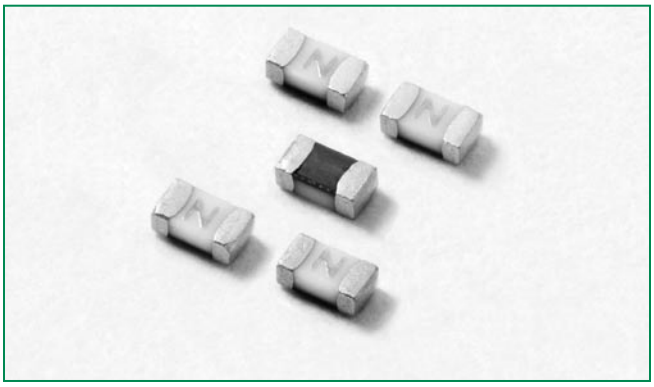

Description

This 100% Lead-free, RoHS compliant and Halogen-free fuse series has been designed specifically to provide over current protection to circuits that see high working ambient temperatures (up to 150°C) and high inrush currents.

The general design ensures excellent temperature stability and performance reliability.

This high I²t fuse series is designed to have ultra high inrush current withstand capability to avoid nuisance fuse open.

Agency Approvals

AGENCY	AGENCY FILE NUMBER	AMPERE RANGE
	E10480	2A - 6A
	LR29862	2A - 6A

Features

- Operating Temperature from -55°C to 150°C
- 100% Lead-free and RoHS compliant
- Suitable for both leaded and lead-free reflow / wave soldering
- Ultra high I²t values

Electrical Characteristics

% of Ampere Rating	Ampere Rating	Opening Time at 25°C
100%	2A - 6A	4 Hours Minimum
350%	2A - 6A	5 Seconds Maximum

Applications

- Handheld Electronics
- LCD Displays
- Battery Packs
- Hard Disk Drives
- SD Memory Cards
- Automotive Electronics

Electrical Specifications by Item

Ampere Rating (A)	Amp Code	Max. Voltage Rating (V)	Interrupting Rating	Nominal Resistance (Ohms)[2]	Nominal Melting I²t (A²Sec.)[3]	Nominal Voltage Drop At Rated Current (V)[4]	Nominal Power Dissipation At Rated Current (W)	Agency Approvals	
2	002.	32	50 A @ 32 VDC	0.0302	0.3103	0.0551	0.110	X	X
2.5	02.5	32		0.0200	0.5520	0.0534	0.134	X	X
3	003.	32		0.0158	0.8165	0.0531	0.159	X	X
3.5	03.5	32		0.0117	0.9438	0.0468	0.164	X	X
4	004.	32		0.0097	1.2659	0.0475	0.190	X	X
5	005.	32		0.0073	1.6287	0.0472	0.236	X	X
6	006.	32		0.0056	2.6049	0.0464	0.278	X	X

Notes:

1. DC Interrupting Rating tested at rated voltage with time constant < 0.8 msecs.
2. Nominal Resistance measured with < 10% rated current.
3. Nominal Melting I²t measured at 1 msec. opening time.
4. Nominal Voltage Drop measured at rated current after temperature has stabilized.

Devices designed to carry out rated current for 4 hours minimum. It is recommended that devices be operated continuously at no more than 80% rated current. See "Temperature Rerating Curve" for additional rerating information.

Devices designed to be mounted with marking code facing up.

© 2009 Littelfuse, Inc.
Specifications are subject to change without notice.
Please refer to www.littelfuse.com/series/441.html for current information.

Temperature Rerating Curve

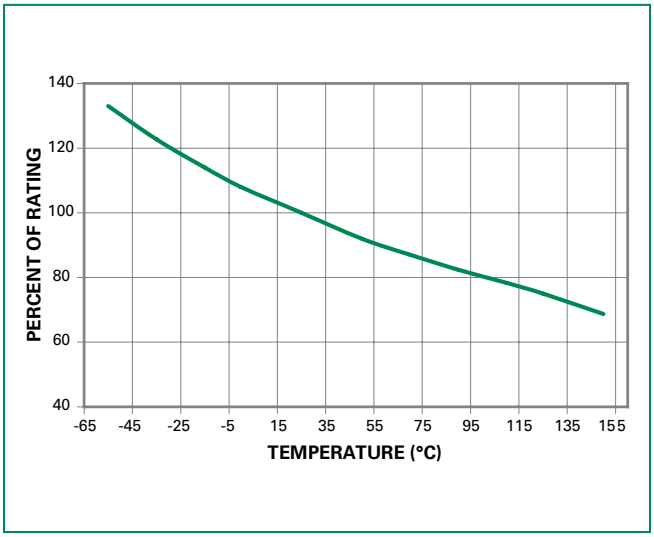

Note:

1. Rerating depicted in this curve is in addition to the standard rerating of 20% for continuous operation.

   For continuous operation at 75 degrees celsius, the fuse should be rerated as follows:

   $I = (0.80)(0.85)I_{RAT} = (0.68)I_{RAT}$

Average Time Current Curves

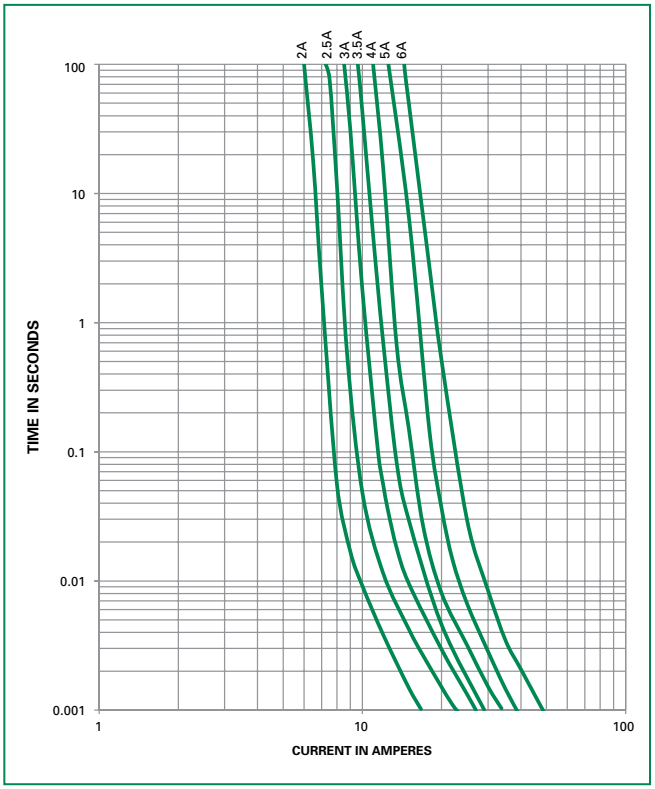

Soldering Parameters

Reflow Condition		Pb – free assembly
Pre Heat	-Temperature Min ($T_{s(min)}$)	150°C
	-Temperature Max ($T_{s(max)}$)	200°C
	-Time (Min to Max) (t_s)	60 – 180 seconds
Average Ramp-up Rate (Liquidus Temp (T_L) to peak)		3°C/second max.
$T_{S(max)}$ to T_L - Ramp-up Rate		5°C/second max.
Reflow	-Temperature (T_L) (Liquidus)	217°C
	-Temperature (t_L)	60 – 150 seconds
Peak Temperature (T_P)		$260^{+0/-5}$ °C
Time within 5°C of actual peak Temperature (t_p)		10 – 30 seconds
Ramp-down Rate		6°C/second max.
Time 25°C to peak Temperature (T_P)		8 minutes max.
Do not exceed		260°C

Wave Soldering	260°C, 10 seconds max.

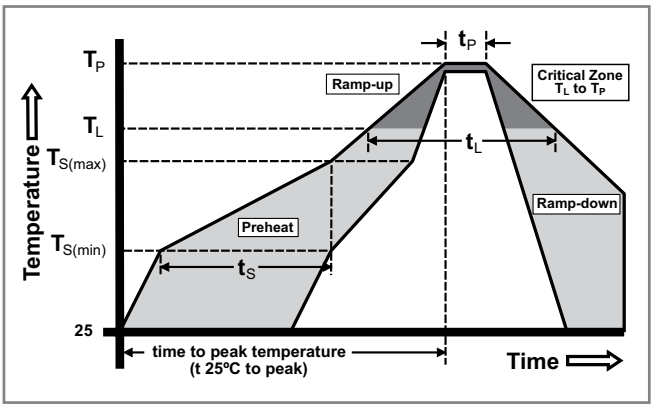

© 2009 Littelfuse, Inc.
Specifications are subject to change without notice.
Please refer to www.littelfuse.com/series/441.html for current information.

Product Characteristics

Materials	**Body:** Advanced Ceramic **Terminations:** Ag / Ni / Sn (100% Lead-free) **Element Cover Coating:** Lead-free Glass
Moisture Sensitivity Level	IPC/JEDEC J-STD-020C, Level 1
Solderability	IPC/ECA/JEDEC J-STD-002C, Condition C
Humidity	MIL-STD-202, Method 103B, Conditions D
Resistance to Solder Heat	MIL-STD-202, Method 210F, Condition B

Moisture Resistance	MIL-STD-202, Method 106G
Thermal Shock	MIL-STD-202, Method 107G, Condition B
Mechanical Shock	MIL-STD-202, Method 213B, Condition A
Vibration	MIL-STD-202, Method 201A
Vibration, High Frequency	MIL-STD-202, Method 204D, Condition D
Dissolution of Metallization	IPC/ECA/JEDEC J-STD-002C, Condition D
Terminal Strength	IEC 60127-4

Dimensions

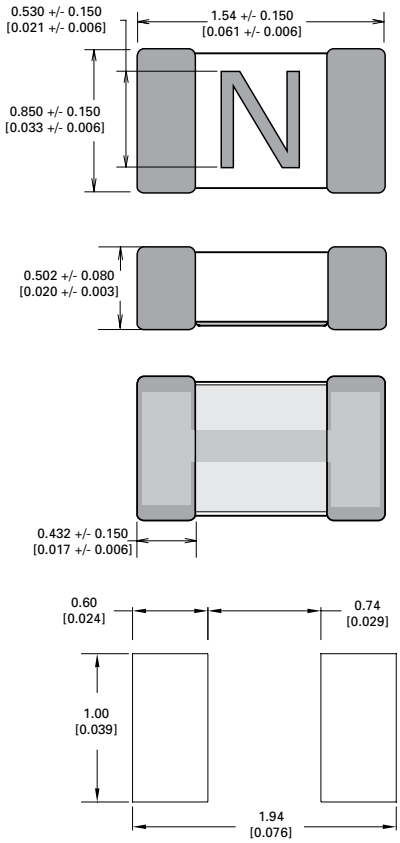

Part Marking System

Amp Code	Marking Code
002.	**N**
02.5	**O**
003.	**P**
03.5	**R**
004.	**S**
005.	**T**
006.	**U**

Part Numbering System

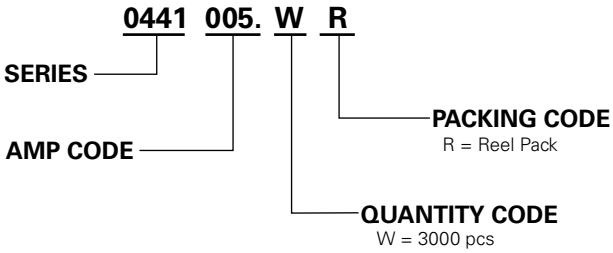

Packaging

Packaging Option	Packaging Specification	Quantity	Quantity & Packaging Code
8mm Tape and Reel	EIA-481, IEC 60286, Part 3	3000	WR

© 2009 Littelfuse, Inc.
Specifications are subject to change without notice.
Please refer to www.littelfuse.com/series/441.html for current information.

© 2009 Littelfuse, Inc.
Specifications are subject to change without notice.