molex
one company > a world of innovation

This document was generated on 06/07/2010

PLEASE CHECK WWW.MOLEX.COM FOR LATEST PART INFORMATION

Part Number: 0438410001
Status: Active
Overview: modular_plugs_jacks
Description: Modular Jack, Right Angle, Low Profile, SMT, 8/6, 2 Ports

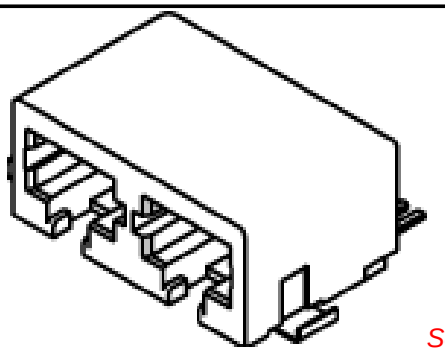

Series image - Reference only

Documents:

3D Model
Drawing (PDF)
Product Specification PS-43743-0001 (PDF)
RoHS Certificate of Compliance (PDF)

Agency Certification

CSA	LR19980
UL	E107635

General

Product Family	Modular Jacks/Plugs
Series	43841
Comments	Outboard Solder Tabs
Component Type	PCB Jack
Magnetic	No
Overview	modular_plugs_jacks
Performance Category	3, 4
Power over Ethernet (PoE)	N/A
Product Name	RJ45

Physical

Boot Color	N/A
Color - Resin	Black
Durability (mating cycles max)	500
Flammability	94V-0
Inverted / Top Latch	No
Lightpipes/LEDs	None
Material - Metal	Phosphor Bronze
Material - Plating Mating	Gold
Material - Plating Termination	Tin
Material - Resin	High Temperature Thermoplastic
Orientation	Right Angle (Side Entry)
PCB Locator	No
PCB Retention	Yes
Packaging Type	Embossed Tape on Reel
Pitch - Mating Interface (in)	0.040 In
Pitch - Mating Interface (mm)	1.02 mm
Pitch - Term. Interface (in)	0.050 In
Pitch - Term. Interface (mm)	1.27 mm
Plating min: Mating (µin)	50
Plating min: Mating (µm)	1.25
Plating min: Termination (µin)	100
Plating min: Termination (µm)	2.5
Ports	2
Positions / Loaded Contacts	8/6
Surface Mount Compatible (SMC)	Yes
Temperature Range - Operating	-40°C to +70°C
Termination Interface: Style	Surface Mount
Waterproof / Dustproof	No
Wire/Cable Type	N/A

Electrical

EU RoHS
ELV and RoHS Compliant
REACH SVHC
Not Reviewed
Halogen-Free Status
Not Reviewed

China RoHS

Need more information on product environmental compliance?

Email productcompliance@molex.com
For a multiple part number RoHS Certificate of Compliance, click here

Please visit the Contact Us section for any non-product compliance questions.

Search Parts in this Series
43841Series

Mates With
FCC 68 Plugs

Current - Maximum per Contact	1.5A
Shielded	No
Voltage - Maximum	150V AC (RMS)

Solder Process Data

Lead-free Process Capability	Reflow Capable (SMT only)
Process Temperature max. C	235

Material Info

Reference - Drawing Numbers

Packaging Specification	PK-70873-700*
Product Specification	PS-43743-0001
Sales Drawing	SD-43841-001

This document was generated on 06/07/2010

PLEASE CHECK WWW.MOLEX.COM FOR LATEST PART INFORMATION

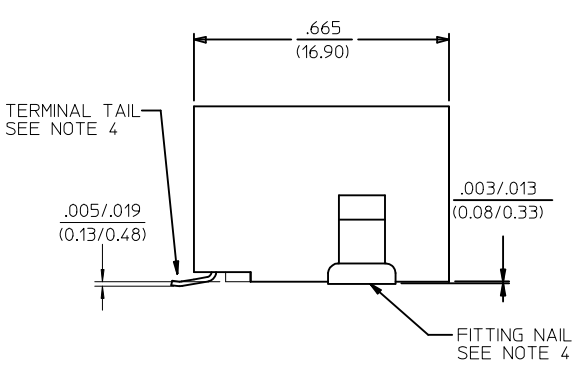

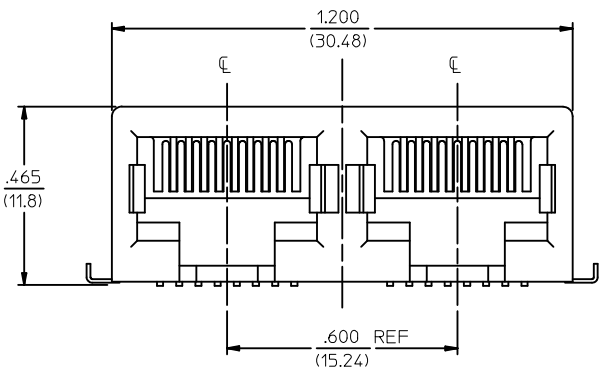

8 CIRCUIT ASSEMBLY

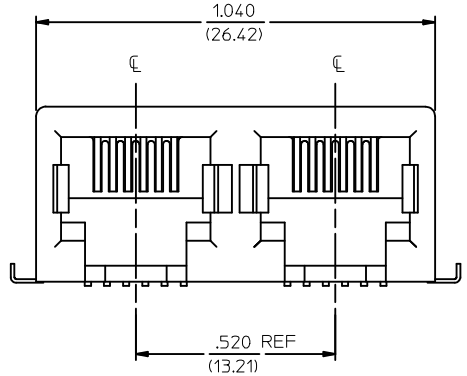

6 CIRCUIT ASSEMBLY

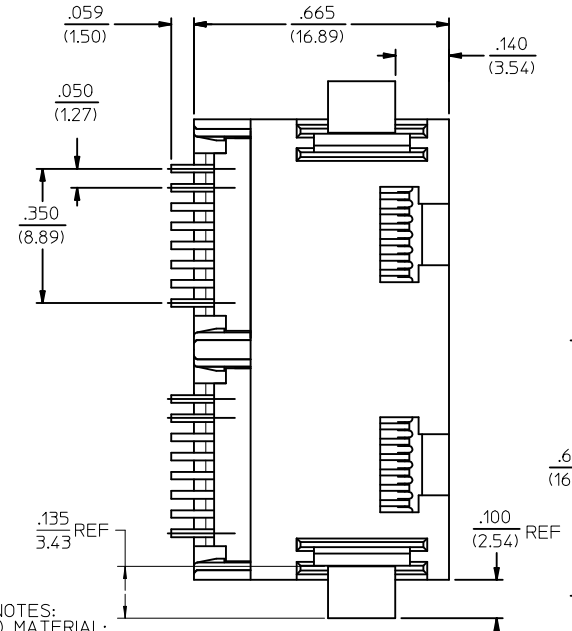

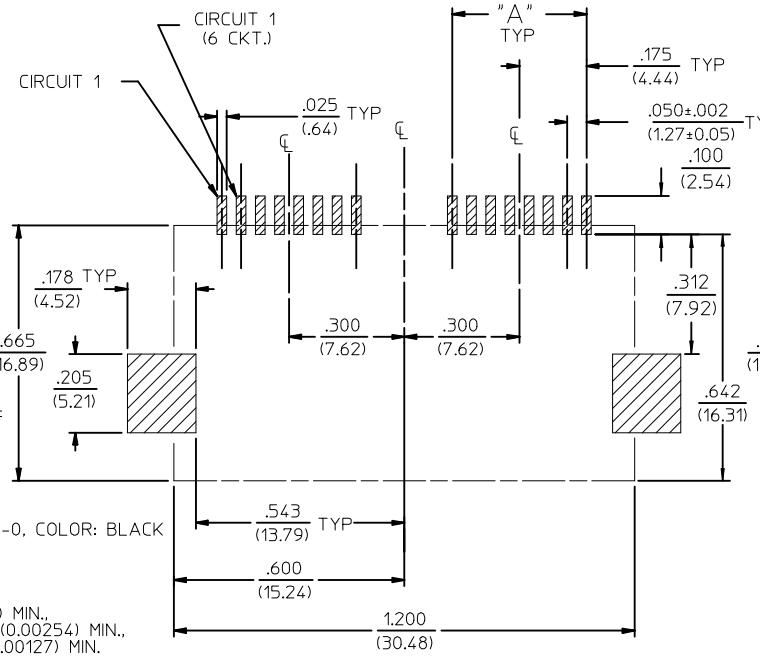

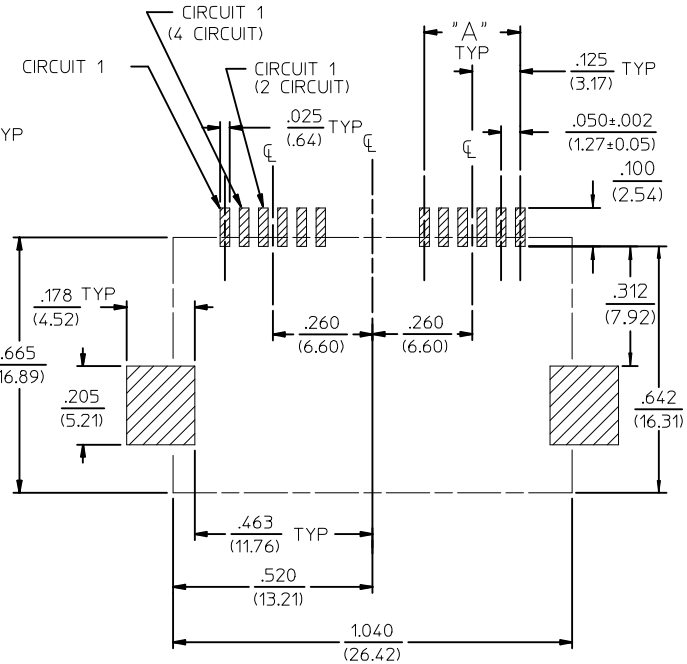

NOTES:
1) MATERIAL:
HOUSING & INSULATOR: NYLON(PA), GLASS FILLED, UL94V-0, COLOR: BLACK
TERMINALS: PHOSPHOR BRONZE, .012/(0.30) THICK
FITTING NAILS: BRASS, .010/(0.25) THICK
2) FINISH:
TERMINALS:
A = SELECT GOLD IN CONTACT AREA: .000050/(0.00127) MIN.,
*SELECT MATTE TIN IN PC TAIL AREA: .000100/(0.00254) MIN.,
WITH OVERALL NICKEL UNDERPLATE: .000050/(0.00127) MIN.
B = SELECT GOLD IN CONTACT AREA: .000030/(0.00076) MIN.,
*SELECT MATTE TIN IN PC TAIL AREA: .000100/(0.00254) MIN.,
WITH OVERALL NICKEL UNDERPLATE: .000050/(0.00127) MIN.
C = SELECT GOLD IN CONTACT AREA: .000015/(0.00038) MIN.,
*SELECT MATTE TIN IN PC TAIL AREA: .000100/(0.00254) MIN.,
WITH OVERALL NICKEL UNDERPLATE: .000050/(0.00127) MIN.
FITTING NAILS:
*100 MICROINCHES MATTE TIN OVER 50 MICROINCHES NICKEL UNDERPLATE
*THE PRIMARY SHIPPING CARTON WILL BE LABELED "COMPLIANT TO RoHS DIRECTIVE 2002/95/EC AND ELV ANNEX II OF DIRECTIVE 2000/53/EC". CARTONS WITHOUT THIS LABEL MAY CONTAIN PRODUCT WITH TIN-LEAD IN THE PC TAILS AND/OR FITTING NAILS.
3) PRODUCT SPECIFICATION AND PROCESSING PARAMETERS: PS-43743-0001.
4) PACKAGING SPECIFICATION:
CONNECTOR ASSEMBLIES TO BE PACKAGED USING TAPE & REEL SYSTEM.
5) COPLANARITY SPECIFICATION:
WHEN AN ASSEMBLY IS PLACED UPON A LEVEL SURFACE, THE MAXIMUM GAP BETWEEN THE LEVEL SURFACE AND ALL TERMINAL TAILS AND BOTH FITTING NAILS IS .006/(0.15).
6) FOR ASSEMBLIES HAVING VOIDED CIRCUITS, THE TAIL PORTION IS CUT AND REMOVED. THE MATING PORTION OF THE TERMINAL REMAINS INTACT. VOIDED CIRCUITS MUST BE THE SAME FOR BOTH PARTS.
7) CONFORMS TO FCC REGULATION PART 68.5 FOR MODULAR JACKS.

PC BOARD LAYOUT FOR
8 POSITION HOUSING
(COMPONENT SIDE OF BOARD)

PC BOARD LAYOUT FOR
6 POSITION HOUSING
(COMPONENT SIDE OF BOARD)

2	F
1	G2
SHT	REV

REVISED NOTES
EC NO: UCP2009-12444 2009/12/10
DRWN: JKLOSTEMEIER 2008/12/10
CHKD: JBELL 2008/12/10
APPR: FSMITH 2008/12/10
DESCRIPTION
G2
REV

QUALITY SYMBOLS
▼=0
▽=0

GENERAL TOLERANCES (UNLESS SPECIFIED)

	mm	INCH
4 PLACES	± ---	± ---
3 PLACES	± ---	± .010
2 PLACES	± 0.25	± .015
1 PLACE	± .38	± ---
ANGULAR ±1/2°		

DRAFT WHERE APPLICABLE MUST REMAIN WITHIN DIMENSIONS

DIMENSION STYLE: IN/MM
SCALE: 1:1
DESIGN UNITS: INCH
THIRD ANGLE PROJECTION

DRAWN BY	PEARSON	DATE 01/07/97
CHECKED BY	MUELLER	DATE 01/07/97
APPROVED BY	EDGLEY	DATE 01/07/97

TITLE: 4, 6 & 8 CIRCUIT DUAL PORT SMT MODJACK

MOLEX INCORPORATED

MATERIAL NO.: SEE SHEET 2
DOCUMENT NO.: SD-43841-001
SHEET NO.: 1 OF 2
SIZE: C

THIS DRAWING CONTAINS INFORMATION THAT IS PROPRIETARY TO MOLEX INCORPORATED AND SHOULD NOT BE USED WITHOUT WRITTEN PERMISSION

ASSEMBLY ITEM NO.	CONNECTOR SIZE	CIRCUIT SIZE	TERMINAL PLATING	TAPE & REEL PACKAGING NO.	VOIDED CIRCUITS
43841-0001	8	4	A	PK-70873-7004	NA
43841-0002	8	6	A	PK-70873-7004	
43841-0003	8	8	A	PK-70873-7004	
43841-0004	6	4	A	PK-70873-7003	
43841-0005	6	6	A	PK-70873-7003	
43841-0006	8	4	B	PK-70873-7004	
43841-0007	8	6	B	PK-70873-7004	
43841-0008	8	8	B	PK-70873-7004	
43841-0009	6	4	B	PK-70873-7003	
43841-0010	6	6	B	PK-70873-7003	
43841-0011	8	4	C	PK-70873-7004	
43841-0012	8	6	C	PK-70873-7004	
43841-0013	8	8	C	PK-70873-7004	
43841-0014	6	4	C	PK-70873-7003	
43841-0015	6	6	C	PK-70873-7003	
43841-0016	6	2	A	PK-70873-7003	
43841-0017	6	2	B	PK-70873-7003	
43841-0018	6	2	C	PK-70873-7003	NA

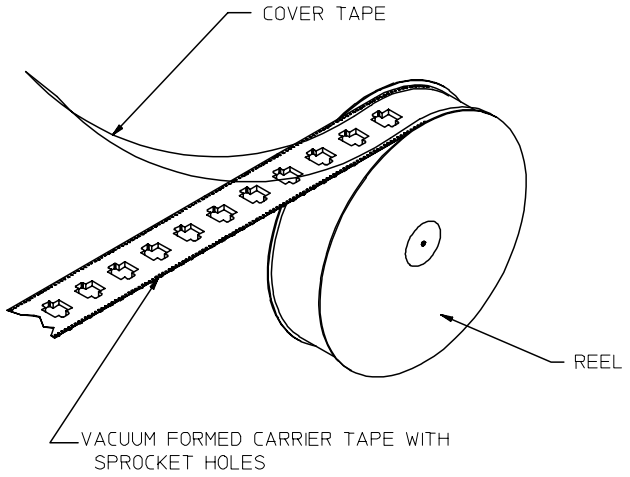

TAPE AND REEL PACKAGING

HOUSING SIZE	CIRCUIT SIZE	DIM. A
6	6	.250 (6.35)
6	4	.150 (3.81)
6	2	.050 (1.27)
8	8	.350 (8.89)
8	6	.250 (6.35)
8	4	.150 (3.81)

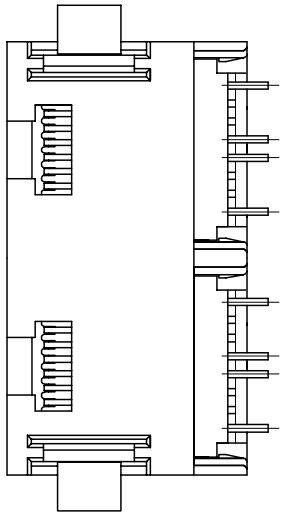

TYPICAL VIEW SHOWING VOIDED CIRCUIT
(CIRCUITS 2,3,6,7 SHOWN VOIDED)

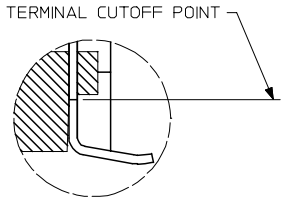

VIEW SHOWING TYPICAL TERMINAL CUTOFF
OF TAIL (SEE NOTE 5) FOR VOIDED CIRCUITS.

SEE SHEET ONE
EC NO: UCP2004-0798
DRWN: LSCHMDT 2004/01/05
CHKD: LSCHMDT 2004/01/05
APPR: FSMITH 2004/01/08
DESCRIPTION
REV

QUALITY SYMBOLS
▼ = 0
▽ (C) = 0

GENERAL TOLERANCES (UNLESS SPECIFIED)

	mm	INCH
4 PLACES	± ---	± ---
3 PLACES	± ---	± .010
2 PLACES	± 0.25	± .015
1 PLACE	± 0.38	± ---
ANGULAR ±1/2°		

DRAFT WHERE APPLICABLE
MUST REMAIN
WITHIN DIMENSIONS

SCALE 4:1 | DESIGN UNITS INCH | THIRD ANGLE PROJECTION | REVISE ON CAD ONLY
DIMENSION STYLE IN/MM

TITLE
4, 6 & 8 CIRCUIT
DUAL PORT SMT MODJACK

DRAWN BY	PEARSON	DATE 01/07/98
CHECKED BY	PEARSON	DATE 01/07/98
APPROVED BY	EDGLEY	DATE 01/07/98

MOLEX INCORPORATED

MATERIAL NO. SEE CHART | DOCUMENT NO. SD-43841-001 | SHEET NO. 2 OF 2

THIS DRAWING CONTAINS INFORMATION THAT IS PROPRIETARY TO MOLEX INCORPORATED AND SHOULD NOT BE USED WITHOUT WRITTEN PERMISSION C