This document was generated on 05/19/2010

PLEASE CHECK WWW.MOLEX.COM FOR LATEST PART INFORMATION

Part Number: 0433743001
Status: Active
Overview: sabre
Description: Sabre™ Crimp Terminal, Female, With Tin (Sn) Plated Brass Contact, 18-20 AWG, Reel Packaged, without TPA, UL1015 or UL1056 Wire

Documents:
Drawing (PDF) RoHS Certificate of Compliance (PDF)

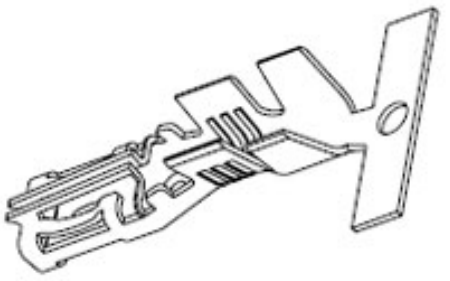

Series image - Reference only

General

Product Family	Crimp Terminals
Series	43374
Crimp Quality Equipment	Yes
Overview	sabre
Product Literature Order No	USA-113
Product Name	Sabre™

Physical

Durability (mating cycles max)	25
Gender	Female
Material - Metal	Brass
Material - Plating Mating	Tin
Material - Plating Termination	Tin
Packaging Type	Reel
Plating min: Mating (µin)	20
Plating min: Mating (µm)	0.50
Plating min: Termination (µin)	20
Plating min: Termination (µm)	0.50
Termination Interface: Style	Crimp or Compression
Wire Insulation Diameter	.071mm-.112mm
Wire Size AWG	18, 20
Wire Size mm²	N/A

Electrical

Current - Maximum per Contact	12A

Material Info

Reference - Drawing Numbers

Sales Drawing	SD-43374-311

EU RoHS
ELV and RoHS Compliant
REACH SVHC
Contains SVHC: No
Halogen-Free Status
Halogen-Free

China RoHS

Need more information on product environmental compliance?

Email productcompliance@molex.com
For a multiple part number RoHS Certificate of Compliance, click here

Please visit the Contact Us section for any non-product compliance questions.

Search Parts in this Series
43374Series

Mates With
43178 Male Crimp Terminals

Use With
44441 Receptacle Housings

Application Tooling | **FAQ**
Tooling specifications and manuals are found by selecting the products below. Crimp Height Specifications are then contained in the Application Tooling Specification document.

Global

Description	Product #
FineAdjust™ Applicator for Sabre™ Flat Blade Crimp Terminal, 18-20 AWG, UL 1015 wires	0639012700

FineAdjust™ Applicator for Sabre™ Flat Blade Crimp Terminal, 18-20 AWG, UL1056 and SPT 3-wires	0639012800
T2 Terminator for Sabre™ Flat Blade Crimp Terminals, 18-20 AWG, UL1015 wires	0639112700
T2 Terminator for Sabre™ Flat Blade Crimp Terminals, 18-20 AWG, UL1056 and SPT-3 wires	0639112800

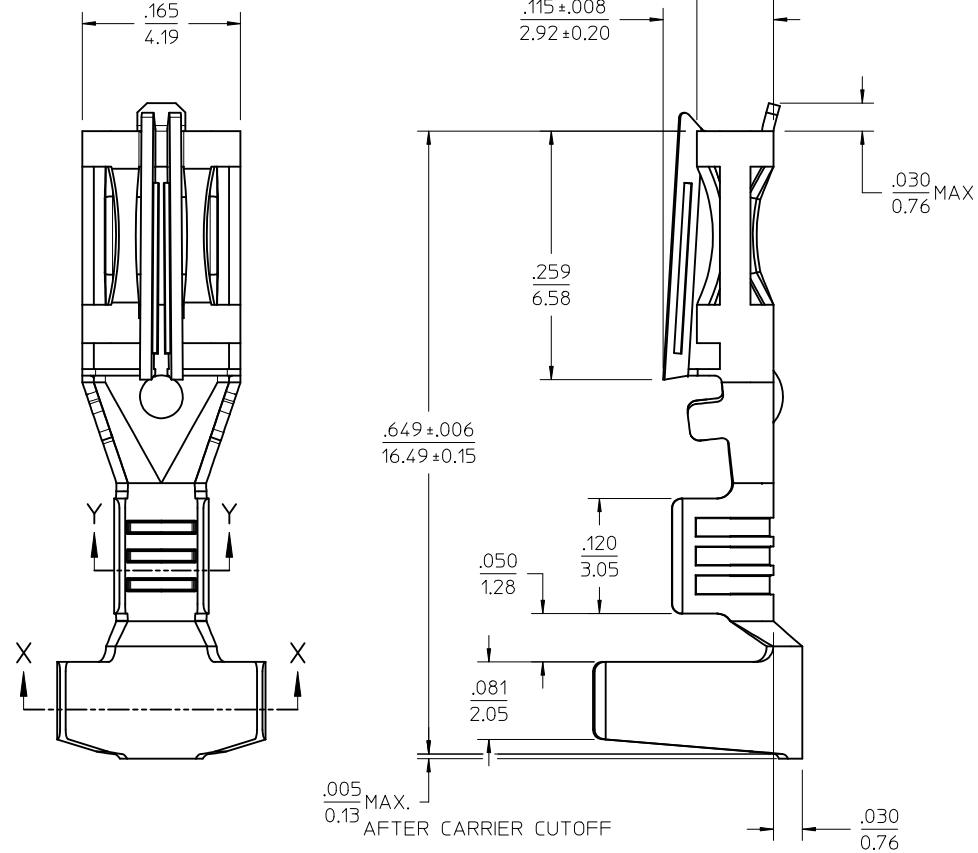

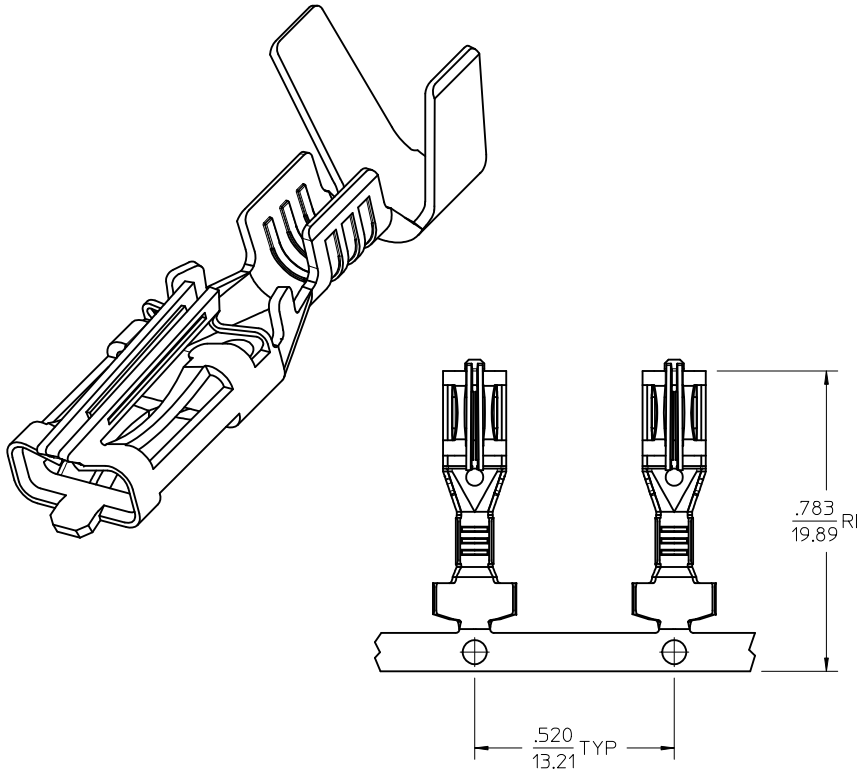

CARRIER STRIP PROGRESSION

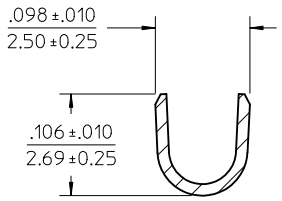

SECTION Y-Y

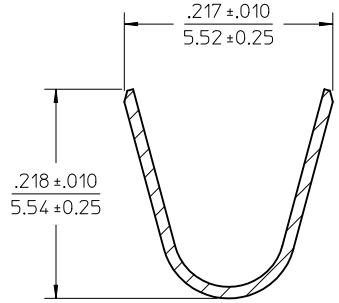

SECTION X-X

NOTES:

1. MATERIAL: C26000 BRASS.
2. FINISH: 20 MICROINCH (0.5 MICROMETER) MINIMUM PREPLATED HOT TIN DIP.
3. PRODUCT SPECIFICATION: PS-44441-001.
4. PACKAGING: TERMINALS WOUND ON 24" REELS WITH PAPER INTERLEAF.
5. THIS TERMINAL FOR USE WITH 18-20 AWG STRANDED WIRE, UL 1015, 1056 OR SPT-3 STYLES, .100-.180 INSULATION DIAMETER. FOR FURTHER INFORMATION, REFER TO MOLEX APPLICATION TOOLING SPECIFICATION.
6. TERMINAL MATES TO .125/93.18 WIDE X .020/(0.51) THICK FLAT BLADE TERMINALS OR MOLEX 43178 SERIES CRIMP TERMINALS.

NEW RELEASE	2010/02/11	
EC NO: UCP2010-1804	2010/02/11	
DRWN: BWIRKUS	2010/02/15	DESCRIPTION
CHKD:		
APPR: BWIRKUS		
A1		REV

QUALITY SYMBOLS
▼=0
▽C=0

GENERAL TOLERANCES (UNLESS SPECIFIED)

	mm	INCH
4 PLACES	± ---	± ---
3 PLACES	± ---	± .005
2 PLACES	± 0.13	± .010
1 PLACE	± 0.25	± ---
ANGULAR ±---°		

DRAFT WHERE APPLICABLE MUST REMAIN WITHIN DIMENSIONS

DIMENSION STYLE	IN/MM
SCALE	10:1
DESIGN UNITS	INCH
	THIRD ANGLE PROJECTION
DRAWN BY / DATE	BWIRKUS 09-09-2009
CHECKED BY / DATE	BWIRKUS 09-09-2009
APPROVED BY / DATE	APATEL 09-09-2009
MATERIAL NO.	433743001
SIZE	C

TITLE: SABRE 18-20AWG CRIMP FEM .125 FL BLD TERM W/O TPA UL1015, 1056 OR SPT-3

MOLEX INCORPORATED

DOCUMENT NO. SD-43374-311

SHEET NO. 1 OF 1

THIS DRAWING CONTAINS INFORMATION THAT IS PROPRIETARY TO MOLEX INCORPORATED AND SHOULD NOT BE USED WITHOUT WRITTEN PERMISSION