This document was generated on 06/14/2018

PLEASE CHECK WWW.MOLEX.COM FOR LATEST PART INFORMATION

Part Number: 0430452008
Status: Active
Overview: Micro-Fit 3.0 Connector System Product Family
Description: Micro-Fit 3.0 Right Angle Header, 3.00mm Pitch, Dual Row, 20 Circuits, with PCB Press-fit Metal Retention Clip, Gold, Glow Wire Capable, Black

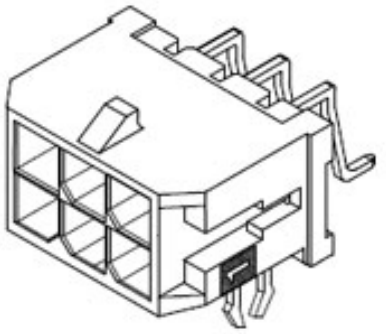

Series image - Reference only

Documents:

- 3D Model
- Drawing (PDF)
- Product Specification PS-43045 (PDF)
- Product Specification TS-43045-001-001 (PDF)
- Product Specification TS-43045-002-001 (PDF)
- Product Specification TS-46235-001-001 (PDF)
- Application Specification AS-43045-001-001 (PDF)
- Packaging Specification PK-70873-05XX-001 (PDF)
- RoHS Certificate of Compliance (PDF)
- Product Literature (PDF)

Agency Certification

CSA	LR19980
UL	E29179

General

Product Family	PCB Headers
Series	43045
Application	Power, Wire-to-Board
Comments	"""""""""""High Temperature|Square Pin|Solder Type<P><P>This Molex product is manufactured from material that has the following ratings, tested by independent agencies:. a) A Glow Wire Ignition Temperature (GWIT) of at least 775 deg C per IEC 60695-2-13.. b) A Glow Wire Flammability Index (GWFI) above 850 deg C per IEC 60695-2-12.and hence complies with the requirements set out in the International Standard IEC 60335-1 5th edition - household and similar electrical appliances - safety, section 30 Resistance to heat and fire. <P><P> The customers using this product must determine its suitability for use in their particular application through testing or other acceptable means as described in end-product glow-wire flammability test standard IEC 60695-2-11 and any applicable product end-use standard(s). <P> If it is determined during the customer's evaluation of suitability, that higher performance is required, please contact Molex for possible product options."""""""""""
Overview	Micro-Fit 3.0 Connector System Product Family
Product Literature Order No	987650-5984
Product Name	Micro-Fit 3.0
UPC	800753840621

Physical

Breakaway	No
Circuits (Loaded)	20
Circuits (maximum)	20
Color - Resin	Black
Durability (mating cycles max)	30
Flammability	94V-0
Glow-Wire Capable	Yes
Mated Height	10.29mm
Material - Metal	Brass
Material - Plating Mating	Gold

EU ELV
Not Relevant

EU RoHS | **China RoHS**
Compliant

REACH SVHC
Not Contained Per -ED/01/2018 (15 January 2018)

Halogen-Free Status
Low-Halogen

Need more information on product environmental compliance?

Email productcompliance@molex.com
Please visit the Contact Us section for any non-product compliance questions.

China ROHS	Green Image
ELV	Not Relevant
RoHS Phthalates	Not Contained

Search Parts in this Series
43045 Series

Mates With
Micro-Fit 3.0 Receptacle Housing 43025
Micro-Fit 3.0 TPA Receptacle Housing 172952

Material - Plating Termination	Tin
Material - Resin	High Temperature Thermoplastic
Net Weight	2.901/g
Number of Rows	2
Orientation	Right Angle
PCB Locator	Yes
PCB Retention	Yes
PCB Thickness - Recommended	1.60mm
Packaging Type	Embossed Tape on Reel
Pitch - Mating Interface	3.00mm
Plating min - Mating	0.762µm
Polarized to PCB	Yes
Shrouded	Fully
Stackable	No
Surface Mount Compatible (SMC)	N/A
Temperature Range - Operating	-40°C to +105°C
Termination Interface: Style	Surface Mount

Electrical

Current - Maximum per Contact	8.5A
Voltage - Maximum	600V

Solder Process Data

Duration at Max. Process Temperature (seconds)	030
Lead-freeProcess Capability	REFLOW
Max. Cycles at Max. Process Temperature	003
Process Temperature max. C	260

Material Info

Reference - Drawing Numbers

Application Specification	AS-43045-001-001
Packaging Specification	PK-70873-05XX-001
Product Specification	PS-43045, TS-43045-001-001, TS-43045-002-001, TS-46235-001-001
Sales Drawing	SD-43045-003-000