This document was generated on 05/24/2010

PLEASE CHECK WWW.MOLEX.COM FOR LATEST PART INFORMATION

Part Number: 0430451208
Status: Active
Overview: microfit_30
Description: 3.00mm (.118") Pitch Micro-Fit 3.0™ Header, Surface Mount, Dual Row, Right Angle, with Press-fit Metal Retention Clip, 12 Circuits, 0.76µm (30µ") Gold (Au) Selective Plating, Glow Wire Compatible

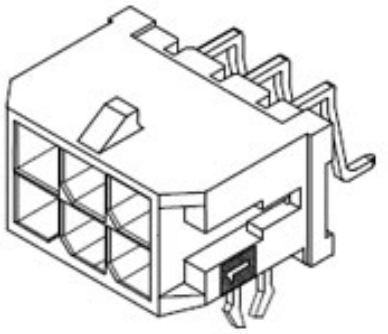

Series image - Reference only

Documents:

3D Model
Drawing (PDF)
Product Specification PS-43045 (PDF)
RoHS Certificate of Compliance (PDF)

Agency Certification

CSA	LR19980
TUV	R72081037
UL	E29179

General

Product Family	PCB Headers
Series	43045
Application	Wire-to-Board
Comments	Glow Wire Equivalent Part Number 430451208. High Temperature, Square Pin, Solder Type
Overview	microfit_30
Product Literature Order No	USA-106
Product Name	Micro-Fit 3.0™

Physical

Breakaway	No
Circuits (Loaded)	12
Circuits (maximum)	12
Color - Resin	Black
Durability (mating cycles max)	30
Flammability	94V-0
Glow-Wire Compliant	Yes
Mated Height (in)	0.405 In
Mated Height (mm)	10.29 mm
Material - Metal	Brass
Material - Plating Mating	Gold
Material - Plating Termination	Tin
Material - Resin	High Temperature Thermoplastic
Number of Rows	2
Orientation	Right Angle
PCB Locator	Yes
PCB Retention	Yes
PCB Thickness Recommended (in)	0.062 In
PCB Thickness Recommended (mm)	1.60 mm
Packaging Type	Embossed Tape on Reel
Pitch - Mating Interface (in)	0.118 In
Pitch - Mating Interface (mm)	3.00 mm
Plating min: Mating (µin)	30
Plating min: Mating (µm)	0.76
Plating min: Termination (µin)	100
Plating min: Termination (µm)	2.50
Polarized to PCB	Yes
Shrouded	Fully
Stackable	No

EU RoHS
ELV and RoHS Compliant
REACH SVHC
Contains SVHC: No
Halogen-Free Status
Halogen-Free

China RoHS

Need more information on product environmental compliance?

Email productcompliance@molex.com
For a multiple part number RoHS Certificate of Compliance, click here

Please visit the Contact Us section for any non-product compliance questions.

Search Parts in this Series
43045Series

Mates With
43025

Surface Mount Compatible (SMC)	N/A
Temperature Range - Operating	-40°C to +105°C
Termination Interface: Style	Surface Mount

Electrical

Current - Maximum per Contact	5A
Voltage - Maximum	250V

Solder Process Data

Duration at Max. Process Temperature (seconds)	30
Lead-free Process Capability	Reflow Capable (SMT only)
Max. Cycles at Max. Process Temperature	3
Process Temperature max. C	260

Material Info

Reference - Drawing Numbers

Packaging Specification	PK-70873-05**
Product Specification	PS-43045, RPS-43045-003, RPS-43045-004
Sales Drawing	SD-43045-003
Test Summary	TS-43045-001, TS-43045-002

This document was generated on 05/24/2010

PLEASE CHECK WWW.MOLEX.COM FOR LATEST PART INFORMATION

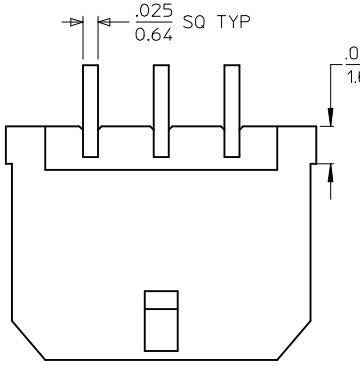

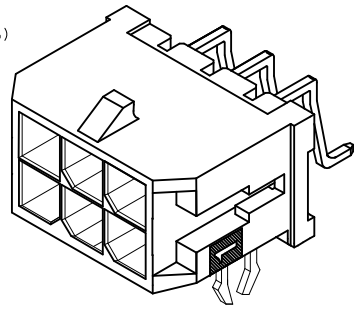

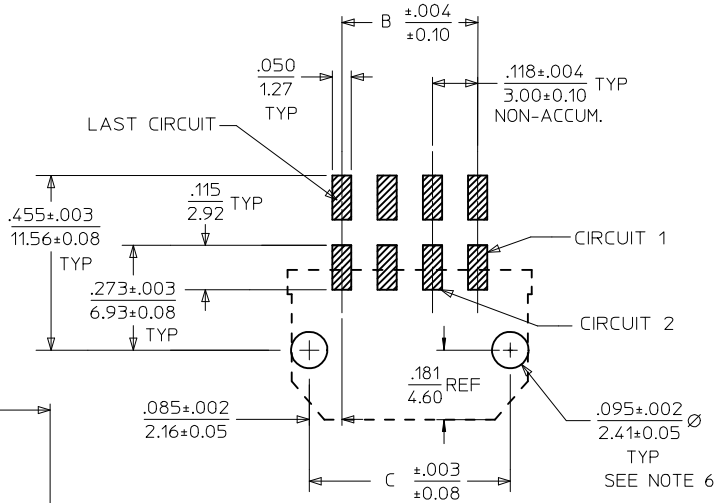

CKTS	A (SEE NOTE 8)	B	C
02	.262 6.65	NA	.169 4.30
04	.380 9.65	.118 3.00	.287 7.30
06	.498 12.65	.236 6.00	.405 10.30
08	.616 15.65	.354 9.00	.524 13.30
10	.734 18.65	.472 12.00	.642 16.30
12	.852 21.65	.591 15.00	.760 19.30
14	.970 24.65	.709 18.00	.878 22.30
16	1.088 27.65	.827 21.00	.996 25.30
18	1.206 30.65	.945 24.00	1.114 28.30
20	1.325 33.65	1.063 27.00	1.232 31.30
22	1.443 36.65	1.181 30.00	1.350 34.30
24	1.561 39.65	1.299 33.00	1.469 37.30

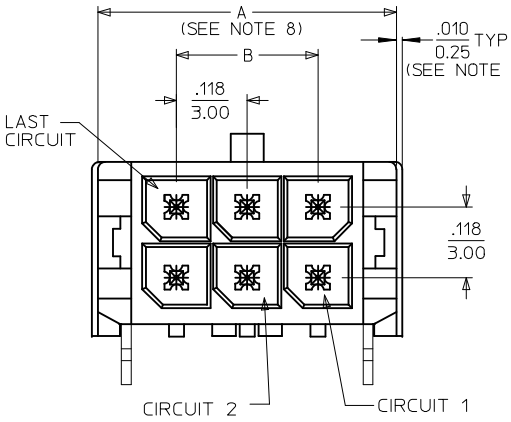

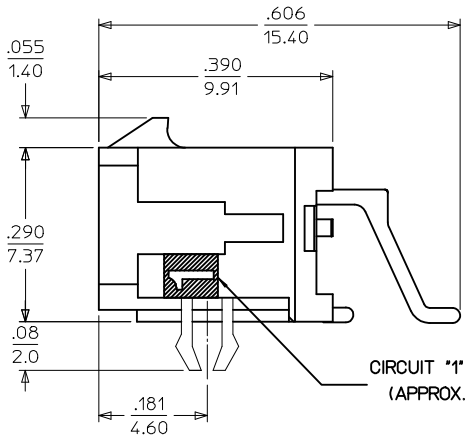

PCB LAYOUT: COMPONENT SIDE
RECOMMEND PCB THICKNESS: .062/1.57

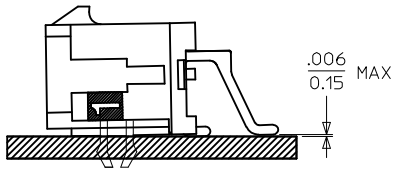

COPLANARITY DETAIL
(SEE NOTE #7)

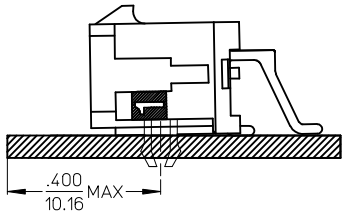

LOCATION DETAIL
(SEE NOTE #9)

NOTES:

1. HOUSING MATERIAL: GLASS FILLED LIQUID CRYSTAL POLYMER, UL94V-0, COLOR: BLACK
   TERMINAL MATERIAL: BRASS ALLOY
2. FINISH: A = .000100/(0.00254) MIN. TIN OVER
   .000050/(0.00127) MIN. NICKEL PLATE.
   B = .000015/(0.00038) MIN. SELECT GOLD IN CONTACT AREA;
   .000100/(0.00254) MIN. SELECT MATTE TIN ON SOLDER TAILS;
   BOTH OVER .000050/(0.00127) MIN. NICKEL PLATE.
   C = .000030/(0.00076) MIN. SELECT GOLD IN CONTACT AREA;
   .000100/(0.00254) MIN. SELECT MATTE TIN ON SOLDER TAILS;
   BOTH OVER .000050/(0.00127) MIN. NICKEL PLATE.
   * THE PRIMARY SHIPPING CARTON WILL BE LABELED "COMPLIANT TO RoHS DIRECTIVE 2002/95/EC AND ELV ANNEX II OF DIRECTIVE 2000/53/EC." CARTONS WITHOUT THIS LABEL MAY CONTAIN PRODUCT WITH TIN/LEAD IN THE PC TAIL AREA.
3. PRODUCT SPECIFICATION: PS-43045
4. TAPE AND REEL PACK: SEE MOLEX DRAWING PK-70873-05**
5. MATES WITH MICRO FIT (3.0) RECEPTACLE SERIES 43025
6. TO MINIMZE INSERTION FORCE OF MOUNTING CLIPS DURING ROBOTIC PLACEMENT THE HOLE DIAMETER SHOULD BE INCREASED TO .108±.002 / 2.74±0.05 AND THEN EVALUATED PER PLACEMENT EQUIPMENT.
7. THE COPLANARITY DIMENSION IS ESTABLISHED BY PLACING THE ASSEMBLY ON A FLAT SURFACE. THE DISTANCE FROM THAT SURFACE TO THE BOTTOM OF ANY TERMINAL MUST NOT EXCEED .006/0.15
8. .010/0.25 OFFSETS ARE PRESENT ON ALL PARTS MANUFACTURED AFTER 11/1/2007, AND ON PARTS PRIOR TO 11/1/2007 THAT CONTAIN A GREEN DOT ON THE PRIMARY SHIPPING CARTON LABEL.
9. TO AVOID INTERFERENCE BETWEEN RECEPTACLE AND PCB, HEADER MUST BE PLACED WITHIN .400/(10.16) MAX. FROM EDGE OF PCB, AS SHOWN IN LOCATION DETAIL.
10. THIS PART CONFORMS TO CLASS B REQUIREMENTS OF COSMETIC SPECIFICATION PS-45499-002.

CKTS	FINISH A MATERIAL NO:	FINISH B MATERIAL NO:	FINISH C MATERIAL NO:
02	43045-0206	43045-0207	43045-0208
04	43045-0406	43045-0407	43045-0408
06	43045-0606	43045-0607	43045-0608
08	43045-0806	43045-0807	43045-0808
10	43045-1006	43045-1007	43045-1008
12	43045-1206	43045-1207	43045-1208
14	43045-1406	43045-1407	43045-1408
16	43045-1606	43045-1607	43045-1608
18	43045-1806	43045-1807	43045-1808
20	43045-2006	43045-2007	43045-2008
22	43045-2206	43045-2207	43045-2208
24	43045-2406	43045-2407	43045-2408

HOUSING FOOTPRINT
EC NO: UCP2009-0781 2008/09/30
DRWN:GAVERILL 2008/10/03
CHKD:SSOUSEK 2008/10/03
APPR:FSMITH 2008/10/03
DESCRIPTION
F2
REV

QUALITY SYMBOLS
▼=0
▽=0

GENERAL TOLERANCES (UNLESS SPECIFIED)

	mm	INCH
4 PLACES	± ---	± ---
3 PLACES	± ---	± .010
2 PLACES	± 0.25	± .014
1 PLACE	± 0.36	± ---
ANGULAR ±1/2°		

DRAFT WHERE APPLICABLE MUST REMAIN WITHIN DIMENSIONS

DIMENSION STYLE: IN/MM
SCALE: ---
DESIGN UNITS: METRIC
THIRD ANGLE PROJECTION

		DATE
DRAWN BY	SAMIEC	2000/03/15
CHECKED BY	MUELLER	2000/03/15
APPROVED BY	EDGLEY	2000/03/15

TITLE: MICRO FIT (3.0) DUAL ROW RIGHT ANGLE SMT HEADER W/CLIPS ASS'Y

molex MOLEX INCORPORATED

MATERIAL NO.: SEE CHART
DOCUMENT NO.: SD-43045-003
SHEET NO.: 1 OF 1
SIZE: C

THIS DRAWING CONTAINS INFORMATION THAT IS PROPRIETARY TO MOLEX INCORPORATED AND SHOULD NOT BE USED WITHOUT WRITTEN PERMISSION