NB SB SERIES POWER ENTRY MODULE FILTERS

INTRODUCTIONS

1. Applications for UL 544 & UL 2601 health care equipment.
2. Power module incorporates an IEC connector, single or double-fuse (IEC 5x20mm) holder, and double-pole power switch, plus an EMI filter all-in-one easy-to-install unit.

COMPONENTS

PART NO.	C1 (uF)	L (mH)	R (Ohm)
03NB3M	0.1	2.5	1.0
03NB4M			
04NB3M		2.0	
04NB4M			
06NB3M		1.05	
06NB4M			
10NB3M		0.2	
10NB4M			
03SB3M		2.5	
03SB4M			
04SB3M		2.0	
04SB4M			
06SB3M		1.05	
06SB4M			
• 10SB3M		0.2	
• 10SB4M			

• VDE approved 6A to 250VAC

SPECIFICATIONS

1. Maximum leakage current each
   line-to-ground @ 115VAC 60Hz: 2uA
   @ 250VAC 50Hz: 5uA
2. Hipot rating (one minute)
   line-to-ground: 2250VDC
   line-to-line: 1450VDC
3. Operating frequency: 50/60Hz
4. Rated voltage: 115/250VAC

ELECTRICAL SCHEMATIC

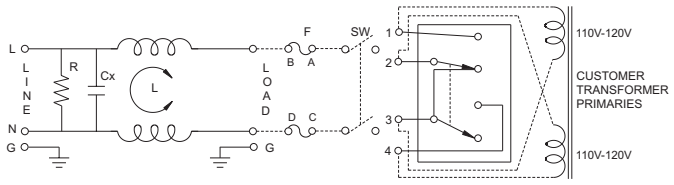

FIG. A

NB3,SB3

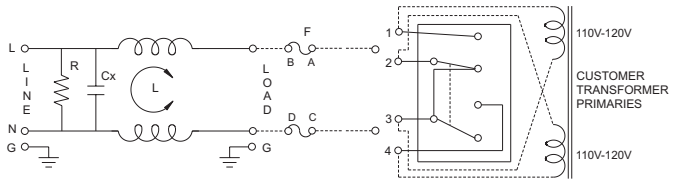

FIG. B

NB4,SB4

TYPE & RATED CURRENT

DELTA PART NO.		03NB3M/SB3M	04NB3M/SB3M	06NB3M/SB3M	10NB3M/SB3M	03NB4M/SB4M	04NB4M/SB4M	06NB4M/SB4M	10NB4M/SB4M
RATED CURRENT	115VAC	3A	4A	6A	10A	3A	4A	6A	10A
	250VAC	3A	4A	6A	6A	3A	4A	6A	6A
IEC CONNECTOR		▲	▲	▲	▲	▲	▲	▲	▲
FUSE		DOUBLE	DOUBLE	DOUBLE	DOUBLE	DOUBLE	DOUBLE	DOUBLE	DOUBLE
*DOUBLE-POLE POWER SWITCH		▲	▲	▲	▲	-	-	-	-
ELECTRICAL SCHEMATIC		FIG. A	FIG. A	FIG. A	FIG. A	FIG. B	FIG. B	FIG. B	FIG. B

3S,4S Fuse single
NB4,SB4 W/O Switch
* UL,CSA,VDE approved current rating: UL/CSA-10A
Electrical lifetime: 10,000 cycles.
Maximum inrush current: 51A

MINIMUM INSERTION LOSS IN dB

COMMON MODE (L-G) IN 50 OHM SYSTEM						
CURRENT RATING	FREQUENCY-MHz					
	.15	.50	1.0	5.0	10	30
03NB3M/SB3M	20	25	25	25	20	10
03NB4M/SB4M	20	25	25	25	20	10
04NB3M/SB3M	20	22	25	25	20	10
04NB4M/SB4M	20	22	25	25	20	10
06NB3M/SB3M	12	15	15	20	20	12
06NB4M/SB4M	12	15	15	20	20	12
10NB3M/SB3M	5	10	10	10	10	7
10NB4M/SB4M	5	10	10	10	10	7

COMMON MODE (L- L) IN 50 OHM SYSTEM						
CURRENT RATING	FREQUENCY-MHz					
	.15	.50	1.0	5.0	10	30
03NB3M/SB3M	4	12	15	25	25	20
03NB4M/SB4M	4	12	15	25	25	20
04NB3M/SB3M	5	10	18	25	25	20
04NB4M/SB4M	5	10	18	25	25	20
06NB3M/SB3M	3	10	15	20	25	20
06NB4M/SB4M	3	10	15	20	25	20
10NB3M/SB3M	4	10	15	22	22	20
10NB4M/SB4M	4	10	15	22	22	20

MECHANICAL CONSTRUCTION



NB3

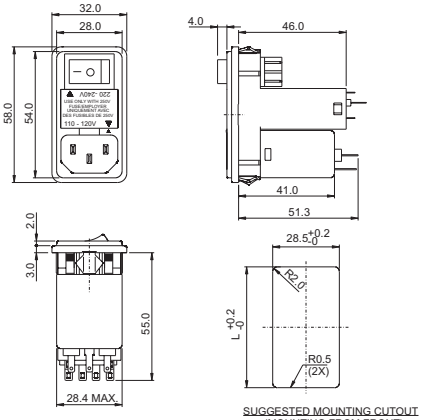

SUGGESTED MOUNTING CUTOUT
(MOUNTING FROM FRONT)

According to panel thickness:
0.8~2.0mm L=55.9
2.1~3.2mm L=56.2



NB4

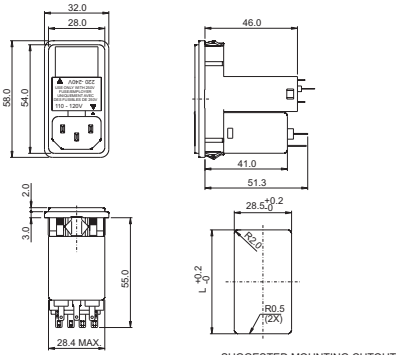

SUGGESTED MOUNTING CUTOUT
(MOUNTING FROM FRONT)

According to panel thickness:
0.8~2.0mm L=55.9
2.1~3.2mm L=56.2



SB3, 3S

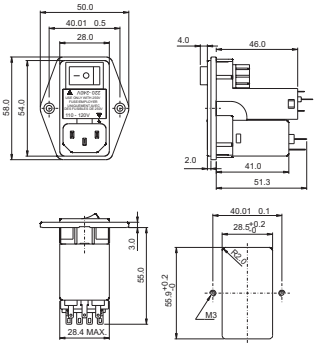

SUGGESTED MOUNTING CUTOUT
(MOUNTING FROM FRONT)



SB4

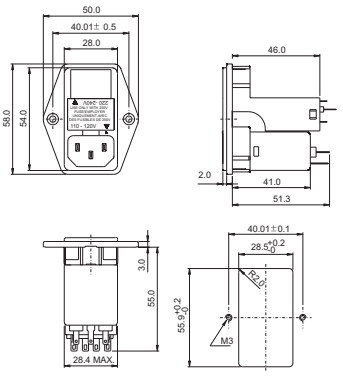

SUGGESTED MOUNTING CUTOUT
(MOUNTING FROM FRONT)

UNIT: INCH / mm