molex
one company > a world of innovation

This document was generated on 02/08/2010

PLEASE CHECK WWW.MOLEX.COM FOR LATEST PART INFORMATION

Part Number: 0395430003

Status: Active

Description: 5.00mm (.197") Pitch Eurostyle™ Vertical Fixed Mount PCB Terminal Block, with Screw Pressure Clamp, 3 Circuits

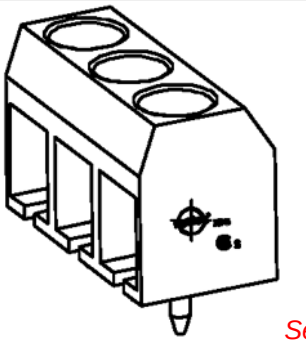

Series image - Reference only

Documents:

3D Model
Drawing (PDF)
RoHS Certificate of Compliance (PDF)

General

Product Family	Terminal Blocks
Series	39543
Application	Wire-to-Board
Component Type	One Piece
Product Literature Order No	USA-355
Product Name	ESE, Eurostyle™Fixed Mount
Type	Euro Block

Physical

Circuits (Loaded)	3
Entry Angle	Horizontal
Lock to Mating Part	None
Number of Rows	1
Orientation	Vertical
PC Tail Length (in)	0.142 In
PC Tail Length (mm)	3.60 mm
PCB Thickness Recommended (in)	0.098 In
PCB Thickness Recommended (mm)	2.50 mm
Panel Mount	No
Pitch - Mating Interface (in)	0.197 In
Pitch - Mating Interface (mm)	5.00 mm
Polarized to Mating Part	N/A
Stackable	No
Temperature Range - Operating	-40°C to +105°C
Wire Size AWG	14, 16, 18, 20, 22, 24
Wire Size mm²	0.20 - 2.08

Electrical

Current - Maximum	10A
Voltage - Maximum	300V

Solder Process Data

Duration at Max. Process Temperature (seconds)	5
Lead-free Process Capability	Wave Capable (TH only)
Max. Cycles at Max. Process Temperature	135
Process Temperature max. C	260

Material Info

Reference - Drawing Numbers

Sales Drawing	SD-39501-002, SD-39543-003

EU RoHS
ELV and RoHS Compliant
REACH SVHC
Not Reviewed
Halogen-Free Status
Not Reviewed

China RoHS

Need more information on product environmental compliance?

Email productcompliance@molex.com
For a multiple part number RoHS Certificate of Compliance, click here

Please visit the Contact Us section for any non-product compliance questions.

Search Parts in this Series
39543Series

This document was generated on 02/08/2010

PLEASE CHECK WWW.MOLEX.COM FOR LATEST PART INFORMATION

39501

3950X SERIES
3.50mm HEADERS

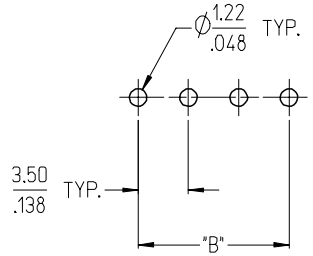

3952X & 3954X SERIES
5.00mm HEADERS
5.00mm 10 AMP FIXED

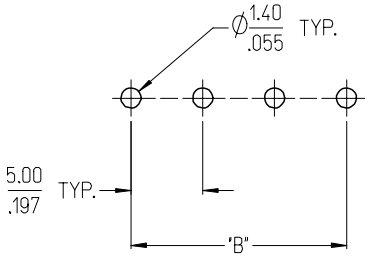

3953X SERIES
5.08mm HEADERS

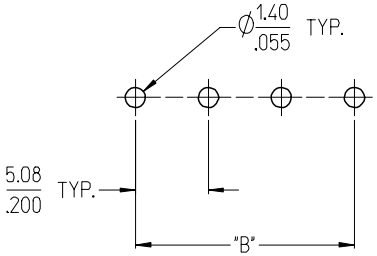

3951X SERIES
3.81mm HEADERS

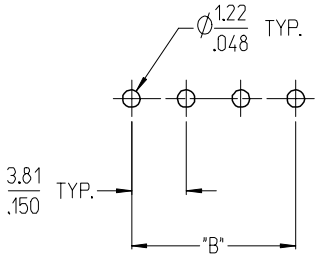

3954X SERIES
5.00mm 15 AMP FIXED

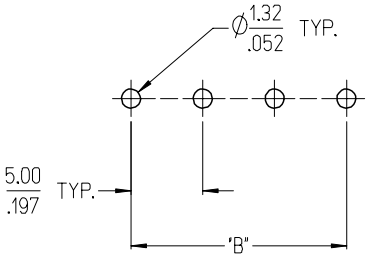

3954X SERIES
5.08mm 15 AMP FIXED

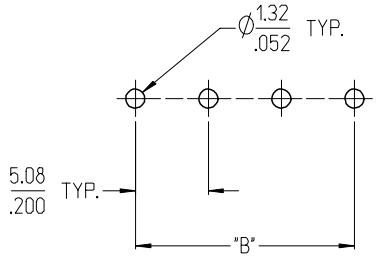

NOTES:

1. REFER TO INDIVIDUAL PRODUCT SALES DRAWINGS FOR "B" DIMENSION.
2. DOES NOT APPLY TO DUAL LEVEL HEADERS, SERIES 39528 AND 39538.
3. TYP. = TYPICAL.

REV	DESCRIPTION	EC NO: ETC2007-0096	DRWN: CLYORK	CHKD: JMACNEIL	APPR: JMACNEIL
A	INITIAL RELEASE		2006/10/02	2006/10/04	2006/10/04

QUALITY SYMBOLS
▼=0
Ⓒ=0

GENERAL TOLERANCES (UNLESS SPECIFIED)

	mm	INCH
4 PLACES	± ---	± ---
3 PLACES	± ---	± .005
2 PLACES	± 0.13	± .01
1 PLACE	± 0.3	± ---
ANGULAR ± 2 °		

DRAFT WHERE APPLICABLE MUST REMAIN WITHIN DIMENSIONS

DIMENSION STYLE: MM/IN
SCALE: 3:1
DESIGN UNITS: INCH
THIRD ANGLE PROJECTION

DRAWN BY	C. YORK	DATE 2006/08/25
CHECKED BY	J. MACNEIL	DATE 2006/08/25
APPROVED BY	J. MACNEIL	DATE 2006/08/25

TITLE: RECOMMENDED PCB LAYOUT FOR ESE TERMINAL BLOCKS

MOLEX INCORPORATED

MATERIAL NO.: --
DOCUMENT NO.: SD-39501-002
SHEET NO.: 1 OF 1
SIZE: B

THIS DRAWING CONTAINS INFORMATION THAT IS PROPRIETARY TO MOLEX INCORPORATED AND SHOULD NOT BE USED WITHOUT WRITTEN PERMISSION

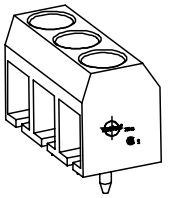

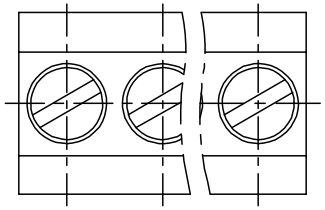

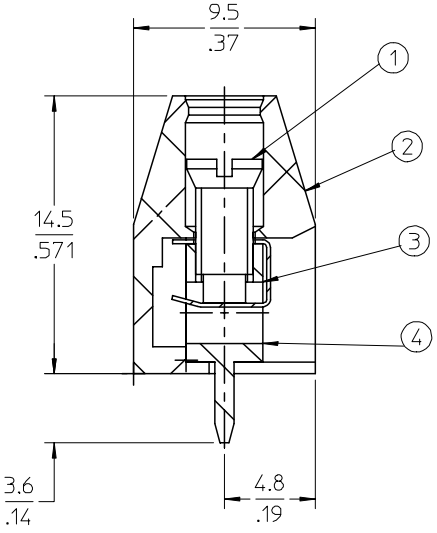

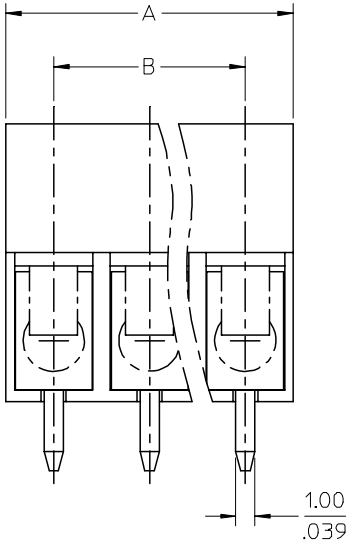



SPECIFICATIONS:

1. Material:
   (1). Screw: Steel.
   (2). Body: PA66
   (3). Wire Protector: QSn
   (4). Terminal: Brass
2. Wire range: 24 - 14AWG.
3. Electrical rating: 300V, 10A.
4. MAX TORQUE: 3 in-lbs.
5. Wire strip length: 5.00mm.
6. Insulation resistance: DC500V, 500M.
7. Operating temperature: -40C to +105C.
8. A = N x P.
9. B = (N - 1) x P
10. P = (Pitch) = 5.00mm (.197").
11. N = Number of positions available 2 through 24.

ENTER DESCRIPTION
EC NO: NEO2006-0310 2006/01/09
DRWN: LROTHAUS 2006/01/09
CH'KD: CYORK 2006/01/10
APPR: JPAWLICK
DESCRIPTION
REV
A

QUALITY SYMBOLS
▼=0
▽=0

GENERAL TOLERANCES (UNLESS SPECIFIED)

	mm	INCH
4 PLACES	± ---	±.0015
3 PLACES	± 0.038	±.005
2 PLACES	± 0.13	±.01
1 PLACE	± 0.3	± ---
ANGULAR ± 2 °		

DRAFT WHERE APPLICABLE MUST REMAIN WITHIN DIMENSIONS

DIMENSION STYLE: MM/IN
SCALE: 4:1
DESIGN UNITS: INCH
THIRD ANGLE PROJECTION

DRAWN BY: LROTHAUS DATE: 12/6/05
CHECKED BY: C. YORK DATE: 01/06/06
APPROVED BY: DATE:

TITLE: 5.0MM, EURO TERM. BLOCK PC MOUNT, VERTICAL

molex MOLEX INCORPORATED

MATERIAL NO.: SEE CHART
DOCUMENT NO.: SD-39543-003
SHEET NO.: 1 OF 1

SIZE B

THIS DRAWING CONTAINS INFORMATION THAT IS PROPRIETARY TO MOLEX INCORPORATED AND SHOULD NOT BE USED WITHOUT WRITTEN PERMISSION

Description	Circuit size	Material Numbers						Dimensional Information			
		Black			Green						
		100% Tin			100% Tin						
		Printing Options			Printing Options			Dim. A		Dim B	
		None	10A	11A	None	10A	11A	mm	inch	mm	inch
5.0mm, Euro Block, PC Mount, Vertical	2	395430002	395431002	395432002	395930002	395931002	395932002	10.00	0.394	5.00	0.197
5.0mm, Euro Block, PC Mount, Vertical	3	395430003	395431003	395432003	395930003	395931003	395932003	15.00	0.591	10.00	0.394
5.0mm, Euro Block, PC Mount, Vertical	4	395430004	395431004	395432004	395930004	395931004	395932004	20.00	0.787	15.00	0.591
5.0mm, Euro Block, PC Mount, Vertical	5	395430005	395431005	395432005	395930005	395931005	395932005	25.00	0.984	20.00	0.787
5.0mm, Euro Block, PC Mount, Vertical	6	395430006	395431006	395432006	395930006	395931006	395932006	30.00	1.181	25.00	0.984
5.0mm, Euro Block, PC Mount, Vertical	7	395430007	395431007	395432007	395930007	395931007	395932007	35.00	1.378	30.00	1.181
5.0mm, Euro Block, PC Mount, Vertical	8	395430008	395431008	395432008	395930008	395931008	395932008	40.00	1.575	35.00	1.378
5.0mm, Euro Block, PC Mount, Vertical	9	395430009	395431009	395432009	395930009	395931009	395932009	45.00	1.772	40.00	1.575
5.0mm, Euro Block, PC Mount, Vertical	10	395430010	395431010	395432010	395930010	395931010	395932010	50.00	1.969	45.00	1.772
5.0mm, Euro Block, PC Mount, Vertical	11	395430011	395431011	395432011	395930011	395931011	395932011	55.00	2.165	50.00	1.969
5.0mm, Euro Block, PC Mount, Vertical	12	395430012	395431012	395432012	395930012	395931012	395932012	60.00	2.362	55.00	2.165
5.0mm, Euro Block, PC Mount, Vertical	13	395430013	395431013	395432013	395930013	395931013	395932013	65.00	2.559	60.00	2.362
5.0mm, Euro Block, PC Mount, Vertical	14	395430014	395431014	395432014	395930014	395931014	395932014	70.00	2.756	65.00	2.559
5.0mm, Euro Block, PC Mount, Vertical	15	395430015	395431015	395432015	395930015	395931015	395932015	75.00	2.953	70.00	2.756
5.0mm, Euro Block, PC Mount, Vertical	16	395430016	395431016	395432016	395930016	395931016	395932016	80.00	3.150	75.00	2.953
5.0mm, Euro Block, PC Mount, Vertical	17	395430017	395431017	395432017	395930017	395931017	395932017	85.00	3.346	80.00	3.150
5.0mm, Euro Block, PC Mount, Vertical	18	395430018	395431018	395432018	395930018	395931018	395932018	90.00	3.543	85.00	3.346
5.0mm, Euro Block, PC Mount, Vertical	19	395430019	395431019	395432019	395930019	395931019	395932019	95.00	3.740	90.00	3.543
5.0mm, Euro Block, PC Mount, Vertical	20	395430020	395431020	395432020	395930020	395931020	395932020	100.00	3.937	95.00	3.740
5.0mm, Euro Block, PC Mount, Vertical	21	395430021	395431021	395432021	395930021	395931021	395932021	105.00	4.134	100.00	3.937
5.0mm, Euro Block, PC Mount, Vertical	22	395430022	395431022	395432022	395930022	395931022	395932022	110.00	4.331	105.00	4.134
5.0mm, Euro Block, PC Mount, Vertical	23	395430023	395431023	395432023	395930023	395931023	395932023	115.00	4.528	110.00	4.331
5.0mm, Euro Block, PC Mount, Vertical	24	395430024	395431024	395432024	395930024	395931024	395932024	120.00	4.724	115.00	4.528

SEE PAGE 1
EC NO: NEO2006-0310 2006/01/09
DRWN:LROTHAUS 2006/01/09
CH'KD:CYORK
APPR: JPAWLICK 2006/01/10
DESCRIPTION
A
REV

QUALITY SYMBOLS
▼=0
▽=0

GENERAL TOLERANCES (UNLESS SPECIFIED)

	mm	INCH
4 PLACES	± ---	±.0015
3 PLACES	± 0.038	±.005
2 PLACES	± 0.13	±.01
1 PLACE	± 0.3	± ---
ANGULAR ± 2 °		

DRAFT WHERE APPLICABLE MUST REMAIN WITHIN DIMENSIONS

DIMENSION STYLE: MM/IN
SCALE: 4:1
DESIGN UNITS: INCH
THIRD ANGLE PROJECTION

DRAWN BY: LROTHAUS DATE: 12/6/05
CHECKED BY: C. YORK DATE:
APPROVED BY: DATE:

TITLE: 5.0MM, EURO TERM. BLOCK PC MOUNT, VERTICAL

molex MOLEX INCORPORATED

MATERIAL NO.: SEE CHART
DOCUMENT NO.: SD-39543-003
SHEET NO.: 2 OF 2
SIZE: B

THIS DRAWING CONTAINS INFORMATION THAT IS PROPRIETARY TO MOLEX INCORPORATED AND SHOULD NOT BE USED WITHOUT WRITTEN PERMISSION