This document was generated on 04/23/2010

PLEASE CHECK WWW.MOLEX.COM FOR LATEST PART INFORMATION

Part Number: 0387207510

Status: Active

Description: 9.53mm (.375") Pitch Beau™ PCB Terminal Strip, without Mounting Ends, 10 Circuits, with Screw Clamp Washer

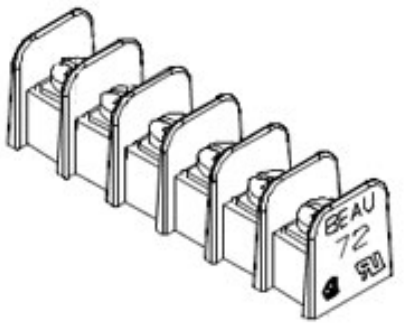

Series image - Reference only

Documents:

3D Model
Drawing (PDF)
Product Specification PS-38710-001 (PDF)
RoHS Certificate of Compliance (PDF)

General

Product Family	Terminal Blocks
Series	38720
Application	Wire-to-Board
Component Type	One Piece
Product Name	Fixed Mount Barrier
Type	Barrier Strip

Physical

Circuits (Loaded)	10
Circuits (maximum)	10
Color - Resin	Black
Entry Angle	Horizontal
Lock to Mating Part	None
Material - Metal	Brass
Material - Plating Mating	Tin
Material - Plating Termination	Tin
Material - Resin	Polyester
Number of Rows	1
Orientation	Horizontal
PC Tail Length (in)	0.190 In
PC Tail Length (mm)	4.80 mm
PCB Retention	None
PCB Thickness Recommended (in)	0.125 In
PCB Thickness Recommended (mm)	3.18 mm
Panel Mount	No
Pitch - Mating Interface (in)	0.375 In
Pitch - Mating Interface (mm)	9.53 mm
Pitch - Term. Interface (in)	0.375 In
Pitch - Term. Interface (mm)	9.53 mm
Plating min: Mating (µin)	150
Plating min: Mating (µm)	3.75
Plating min: Termination (µin)	150
Plating min: Termination (µm)	3.75
Polarized to Mating Part	No
Shrouded	Dual-Barrier
Stackable	No
Surface Mount Compatible (SMC)	No
Temperature Range - Operating	-40°C to +130°C
Wire Size AWG	12, 14, 16, 18, 20, 22
Wire Size mm²	0.50 - 2.50

Electrical

Current - Maximum per Contact	25A
Voltage - Maximum	300V

Solder Process Data

EU RoHS
ELV and RoHS Compliant
REACH SVHC
Not Reviewed
Halogen-Free Status
Not Reviewed

China RoHS

Need more information on product environmental compliance?

Email productcompliance@molex.com
For a multiple part number RoHS Certificate of Compliance, click here

Please visit the Contact Us section for any non-product compliance questions.

Search Parts in this Series
38720Series

Mates With
N/A

Lead-free Process Capability	Wave Capable (TH only)

Material Info

Old Part Number	72510-C-50

Reference - Drawing Numbers

Product Specification	PS-38710-001
Sales Drawing	SD-38720-002

This document was generated on 04/23/2010

PLEASE CHECK WWW.MOLEX.COM FOR LATEST PART INFORMATION

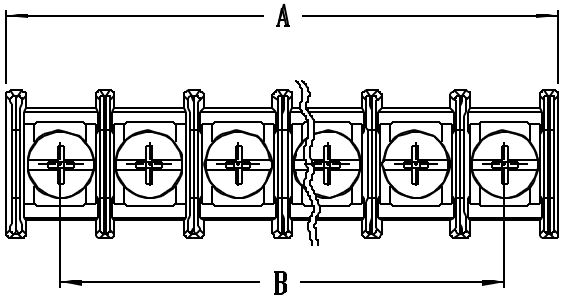

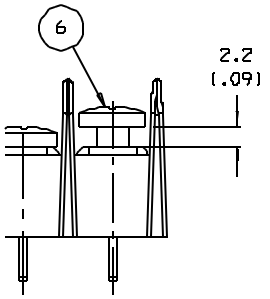

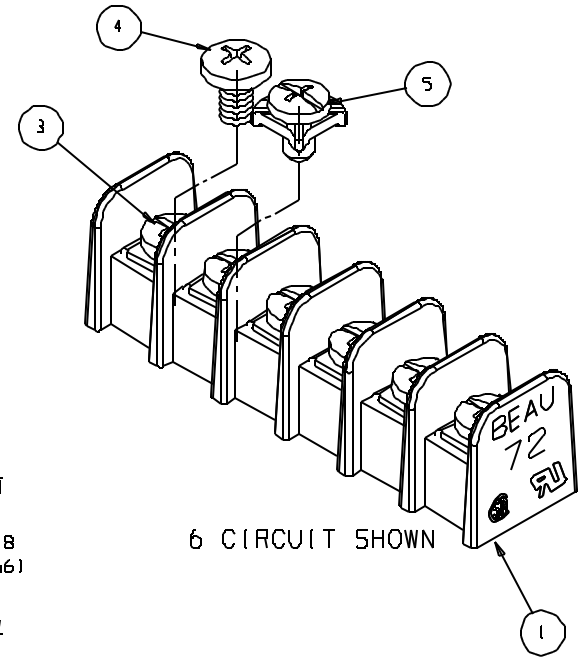

6 CIRCUIT SHOWN

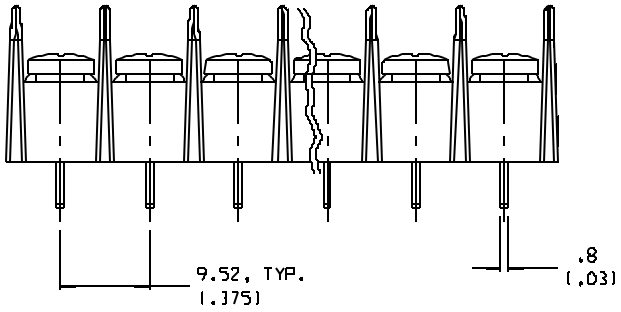

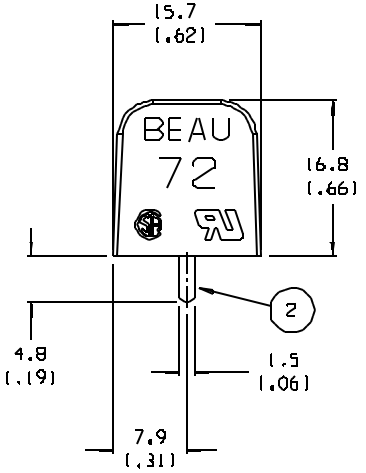

NOTES:

1. MATERIAL: SEE TABLE
2. FINISHES: SEE TABLE
3. PRODUCT SPECIFICATION: UL & CSA CLASS B & C
4. PACKAGING: NOT REQUIRED
5. MATES WITH: NONE
6. "XX" REFERS TO QTY. OF CIRCUITS
7. INCH DIMS SHOWN IN PARENTHESIS (XX)

ITEM	QTY.	DESCRIPTION	MATERIAL	FINISH
6	XX	6-32 BHD, PHIL.-SLOTTED SCREW WRD	STEEL	ZINC CLEAR CHROMATE
5	XX	#6-32 PHIL.,-SLOTTED SCREW W/WASHER	STEEL	ZINC CLEAR CHROMATE
4	XX	#6-32 BHD PHIL.-SLOTTED SCREW	BRASS	NICKEL PLATED
3	XX	#6-32 SCREW PHIL.,-SLOTTED	STEEL	ZINC CLEAR CHROMATE
2	XX	TERMINAL	BRASS	TIN PLATED
1	1	BARRIER	THERMOPLASTIC	BLACK

EC NO. RELEASED
DRWN: WH 11/11/03
CH'K:
APPR:
DESCRIPTION
A
REV

QUALITY SYMBOLS
MAJOR:
CRITICAL: C
SPC: S

GENERAL TOLERANCES: (UNLESS SPECIFIED)

	mm	INCH
4 PLACES		±.0015
3 PLACES	±.038	±.005
2 PLACES	±.13	±.01
1 PLACE	±.3	
ANGULAR:	±2°	

DRAFT WHERE APPLICABLE MUST REMAIN WITHIN DIMENSIONS

SCALE: 2:1
DESIGN UNITS: ☐ mm ☒ INCH
THIRD ANGLE PROJECTION
DRAWN BY & DATE: W. HOWARD 11/11/03
CHECKED BY & DATE:
APPROVED BY & DATE:
CAD FILENAME: 725XX-C
MATERIAL NO.: SEE TABLE
DRAWING NO.: SD-3B720-002
SHEET NO.: 1 OF 2
SIZE: B

PROJECT NO.:
DIMENSIONS: ☒ mm/INCH ☐ INCH/mm ☐ mm ONLY
SHT | REV
REVISE ON CAD ONLY

TITLE: SR, BTS, NO MTG, PC ASSY

MOLEX INCORPORATED

THIS DRAWING CONTAINS INFORMATION THAT IS PROPRIETARY TO MOLEX INCORPORATED AND SHOULD NOT BE USED WITHOUT WRITTEN PERMISSION.

MATERIAL NO. (OPT -C,-47)	MATERIAL NO. (OPT -C,-50)	MATERIAL NO. (OPT -C,-49)	MATERIAL NO. (OPT -C)	NUMBER OF CIRCUITS "XX"	DIM. "A"	DIM. "B"
38720-8102	38720-7502	38720-6902	38720-6302	02	21.1 [.831]	9.53 [.375]
38720-8103	38720-7503	38720-6903	38720-6303	03	30.7 [1.21]	19.05 [.750]
38720-8104	38720-7504	38720-6904	38720-6304	04	40.1 [1.58]	28.58 [1.125]
38720-8105	38720-7505		38720-6305	05	49.8 [1.96]	38.10 [1.500]
38720-8106	38720-7506	38720-6906	38720-6306	06	59.2 [2.33]	47.63 [1.875]
	38720-7507	38720-6907	38720-6307	07	68.8 [2.71]	57.15 [2.250]
38720-8108	38720-7508	38720-6908	38720-6308	08	78.3 [3.08]	66.68 [2.625]
38720-8109	38720-7509	38720-6909	38720-6309	09	87.8 [3.46]	76.20 [3.000]
38720-8110	38720-7510	38720-6910	38720-6310	10	97.3 [3.83]	85.73 [3.375]
	38720-7511	38720-6911	38720-6311	11	106.9 [4.21]	95.25 [3.750]
38720-8112	38720-7512	38720-6912	38720-6312	12	116.3 [4.58]	104.78 [4.125]
	38720-7513	38720-6913	38720-6313	13	126.0 [4.96]	114.30 [4.500]
38720-8114	38720-7514	38720-6914	38720-6314	14	135.3 [5.33]	123.83 [4.875]
	38720-7515	38720-6915	38720-6315	15	145.0 [5.71]	133.35 [5.250]
38720-8116	38720-7516	38720-6916	38720-6316	16	154.4 [6.08]	142.88 [5.625]
	38720-7517	38720-6917	38720-6317	17	164.1 [6.46]	152.40 [6.000]
	38720-7518	38720-6918	38720-6318	18	173.5 [6.83]	161.93 [6.375]
	38720-7519		38720-6319	19	183.1 [7.21]	171.45 [6.750]
	38720-7520	38720-6920	38720-6320	20	192.5 [7.58]	180.98 [7.125]
	38720-7521		38720-6321	21	202.2 [7.96]	190.50 [7.500]
	38720-7522	38720-6922	38720-6322	22	211.6 [8.33]	200.03 [7.875]
	38720-7523		38720-6323	23	221.2 [8.71]	209.55 [8.250]
	38720-7524		38720-6324	24	230.6 [9.08]	219.08 [8.625]
	38720-7525		38720-6325	25	240.3 [9.46]	228.60 [9.000]
	38720-7526		38720-6326	26	249.6 [9.83]	238.13 [9.375]

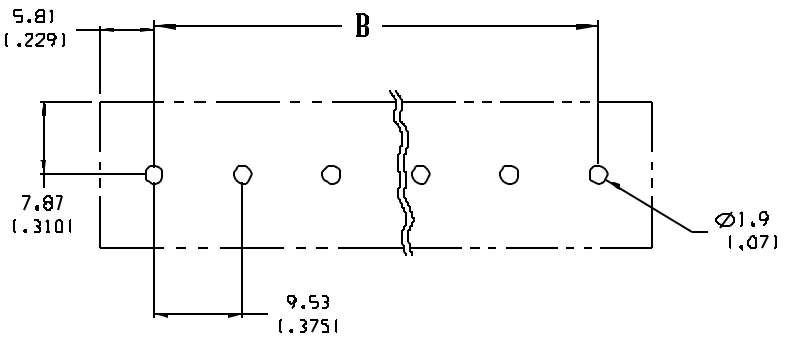

PTH PATTERN

EC NO: SEE SHT 1
DRWN:
CH'K:
APP'R:
DESCRIPTION
REV
A

QUALITY SYMBOLS
MAJOR:
CRITICAL (C):
SPC (S):

GENERAL TOLERANCES (UNLESS SPECIFIED)

	mm	INCH
4 PLACES		±.0015
3 PLACES	±.038	±.005
2 PLACES	±.13	±.01
1 PLACE	±.3	
ANGULAR:	±2°	

DRAFT WHERE APPLICABLE MUST REMAIN WITHIN DIMENSIONS

SCALE: 2:1
DESIGN UNITS: ☐ mm ☒ INCH
THIRD ANGLE PROJECTION
PROJECT NO.:
DIMENSIONS: ☒ mm/INCH ☐ (INCH/mm) ☐ mm ONLY
SHT: -
REV: -
REVISE ON CAD ONLY

DRAWN BY & DATE: W. HOWARD 11/11/03
CHECKED BY & DATE:
APPROVED BY & DATE:
CAD FILENAME: 725XX-C

TITLE: SR, BTS, NO MTG, PC ASSY

MOLEX INCORPORATED

MATERIAL NO.: SEE TABLE
DRAWING NO.: SD-38720-002
SHEET NO.: 2 OF 2
SIZE: B

THIS DRAWING CONTAINS INFORMATION THAT IS PROPRIETARY TO MOLEX INCORPORATED AND SHOULD NOT BE USED WITHOUT WRITTEN PERMISSION.