molex
one company > a world of innovation

This document was generated on 06/07/2010

PLEASE CHECK WWW.MOLEX.COM FOR LATEST PART INFORMATION

Part Number: 0359780550

Status: Planned for Obsolescence

Description: 3.96mm (.156") Pitch Wire-to-Board Header, Vertical, Low Profile, 4 Circuits, 10 Positions with Pins 2, 3, 5, 6, 7, and 8 Voided, Natural, Nylon

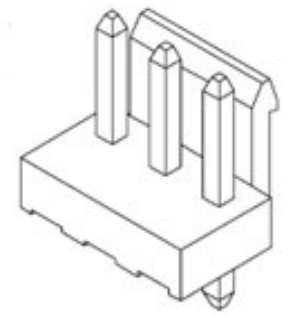

Series image - Reference only

Documents:

3D Model
Drawing (PDF)
Product Specification PS-35978-001 (PDF)
RoHS Certificate of Compliance (PDF)

Agency Certification

CSA	LR19980
TUV	R72090224
UL	E29179

General

Product Family	PCB Headers
Series	35978
Application	Wire-to-Board
Product Name	MV-396™

Physical

Breakaway	No
Circuits (Loaded)	4
Circuits (maximum)	10
Color - Resin	Natural
Durability (mating cycles max)	30
First Mate / Last Break	No
Flammability	94V-0
Glow-Wire Compliant	No
Guide to Mating Part	No
Keying to Mating Part	None
Lock to Mating Part	Yes
Material - Metal	Brass
Material - Plating Mating	Tin
Material - Plating Termination	Tin
Material - Resin	Nylon
Number of Rows	1
Orientation	Vertical
PC Tail Length (in)	0.146 In
PC Tail Length (mm)	3.70 mm
PCB Locator	No
PCB Retention	None
PCB Thickness Recommended (in)	0.062 In
PCB Thickness Recommended (mm)	1.60 mm
Packaging Type	Bag
Pitch - Mating Interface (in)	0.156 In
Pitch - Mating Interface (mm)	3.96 mm
Pitch - Term. Interface (in)	0.156 In
Pitch - Term. Interface (mm)	3.96 mm
Polarized to Mating Part	No
Polarized to PCB	No
Shrouded	No
Stackable	Yes
Surface Mount Compatible (SMC)	No
Temperature Range - Operating	-25°C to +85°C
Termination Interface: Style	Through Hole

EU RoHS
ELV and RoHS Compliant
REACH SVHC
Not Reviewed
Halogen-Free Status
Not Reviewed

China RoHS

Need more information on product environmental compliance?

Email productcompliance@molex.com
For a multiple part number RoHS Certificate of Compliance, click here

Please visit the Contact Us section for any non-product compliance questions.

Search Parts in this Series
35978Series

Mates With
35977 Wire-to-Board Housing

Electrical

Current - Maximum per Contact	7A
Voltage - Maximum	250V

Material Info

Reference - Drawing Numbers

Product Specification	PS-35978-001
Sales Drawing	SD-35978-004

This document was generated on 06/07/2010

PLEASE CHECK WWW.MOLEX.COM FOR LATEST PART INFORMATION

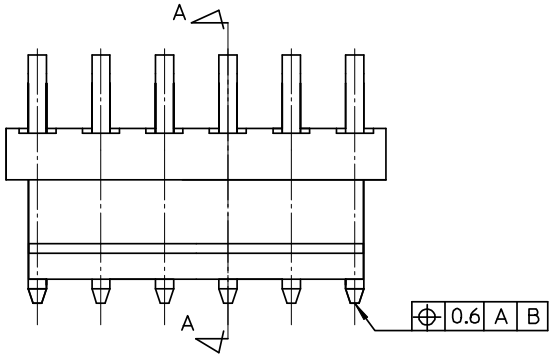

NOTES

1. MATERIAL : HEADER - PA66, PBT/PC
   PIN : BRASS(CDA 2700)

2. FINISHES : PIN
   THICKNESS - TIN(Sn) 3.0 MICROMETER MIN.
   OVER Cu 1.5 MICROMETER MIN

   ▽1 THICKNESS - TIN(Sn) 6.0 MICROMETER MIN.
   OVER Cu 3.0 MICROMETER MIN.

3. PRODUCT SPECIFICATION : PS-35978-002

LEGEND

35978-****

- COLOR : 0 - WHITE, 1 - BLACK, 2 - RED, 3 - YELLOW, 4 - BLUE
- MATERIAL 5 : PA66 6 : PBT/PC
- CONSECUTIVE No.

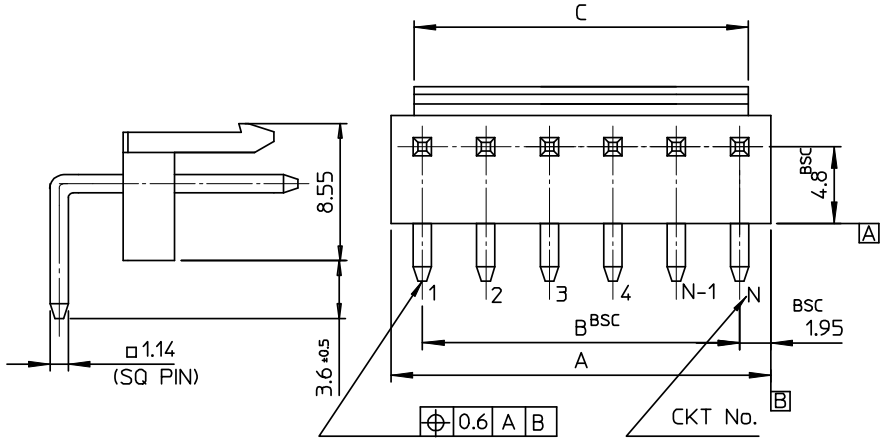

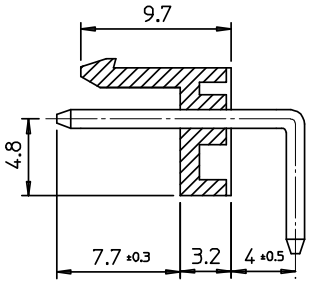

SECTION A-A

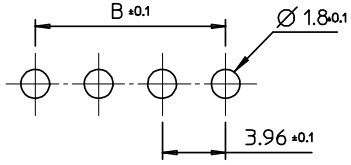

P.C.BOARD LAYOUT(t=1.6)

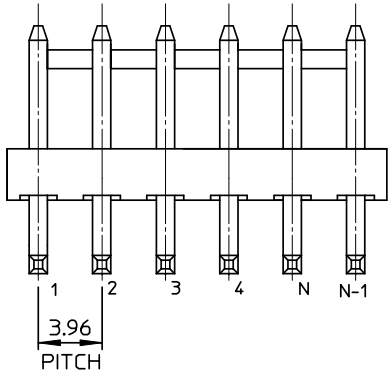

▽1																				
					0	0	X	X	X	X	0	X	X	0	36.70	35.64	39.60	3597805**	35978-05**	4	10
								0	X	0	X	0	X	0	24.84	23.76	27.72	3597804**	35978-04**	4	7
									0	X	0	X	0	0	20.86	19.80	23.76	3597803**	35978-03**	4	6
										0	X	0	X	0	16.90	15.84	19.80	3597802**	35978-02**	3	5
												0	X	0	8.98	7.92	11.88	3597801**	35978-01**	2	3
15	14	13	12	11	10	9	8	7	6	5	4	3	2	1	C	B	A	MAT'L NO	ENG NO.	CKT	N
CKT NO.																					

REVISED
EC NO: KOR2008-0143 2008/02/26
DRWN:JHPARK01 2008/02/26
CH'KD:WY.YANG 2008/02/27
APPR:YUNSIKKIM 2008/02/27
DESCRIPTION
REV

QUALITY SYMBOLS
▼=0
▽C=0

GENERAL TOLERANCES (UNLESS SPECIFIED)

	mm	INCH
4 PLACES	± ---	± ---
3 PLACES	± ---	± ---
2 PLACES	± ---	± ---
1 PLACE	± 0.2	± ---
ANGULAR ± 2 °		

DRAFT WHERE APPLICABLE MUST REMAIN WITHIN DIMENSIONS

DIMENSION STYLE: MM ONLY	SCALE: ---	DESIGN UNITS: METRIC	THIRD ANGLE PROJECTION
DRAWN BY: CB.CHIN DATE: 2003/09/30	TITLE: 3.96 W/B CONN. HEADER ASS'Y(VOID) RIGHT ANGLE		
CHECKED BY: WY.YANG DATE: 2003/09/30			
APPROVED BY: CW.LEE DATE: 2003/09/30	molex MOLEX INCORPORATED		
MATERIAL NO.: SEE TABLE	DOCUMENT NO.: SD-35978-004	SHEET NO.: 1 OF 01	

SIZE A3

THIS DRAWING CONTAINS INFORMATION THAT IS PROPRIETARY TO MOLEX INCORPORATED AND SHOULD NOT BE USED WITHOUT WRITTEN PERMISSION