This document was generated on 04/15/2010

PLEASE CHECK WWW.MOLEX.COM FOR LATEST PART INFORMATION

Part Number: 0359650210
Status: Active
Description: 1.78mm (.070") Tab Multiple Wire-to-Wire Female Housing, 2 Circuits, Vertical, B-Type

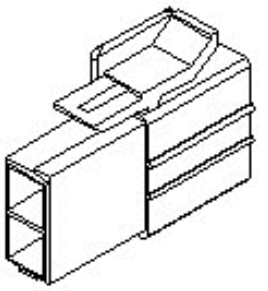

Series image - Reference only

Documents:
Drawing (PDF)
Product Specification PS-35180-002 (PDF)
RoHS Certificate of Compliance (PDF)

Agency Certification

UL	E29179

General

Product Family	Crimp Housings
Series	35965
Product Name	N/A

Physical

Circuits (maximum)	2
Gender	Female
Glow-Wire Compliant	No
Number of Rows	2
Packaging Type	Bag
Panel Mount	No
Pitch - Mating Interface (in)	0.315 In
Pitch - Mating Interface (mm)	8.00 mm
Stackable	No
Temperature Range - Operating	-40°C to +120°C

Material Info

Reference - Drawing Numbers

Product Specification	PS-35180-002
Sales Drawing	SD-35965-021*

EU RoHS
ELV and RoHS Compliant
REACH SVHC
Not Reviewed
Halogen-Free Status
Not Reviewed

China RoHS

Need more information on product environmental compliance?

Email productcompliance@molex.com
For a multiple part number RoHS Certificate of Compliance, click here

Please visit the Contact Us section for any non-product compliance questions.

Search Parts in this Series
35965Series

Mates With
35180

Use With
35746

This document was generated on 04/15/2010

PLEASE CHECK WWW.MOLEX.COM FOR LATEST PART INFORMATION

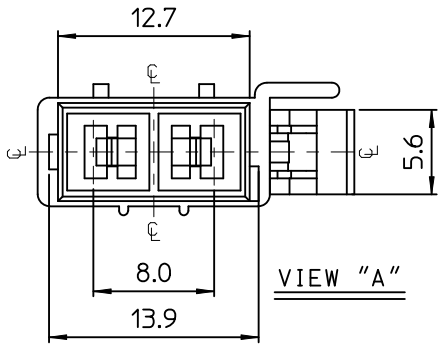

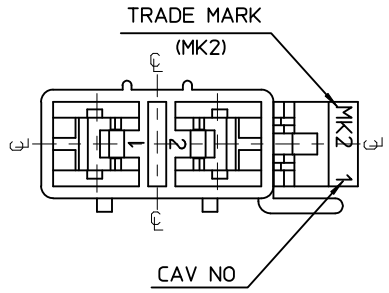

NOTES.
1. MATERIAL & COLOR : SEE TABLE
2. MATED HOUSING : 35180-040*
   35180-060*
3. APPLICABLE TERMINAL : 35745-0*10
4. APPLICABLE T.P.A : 35965-029*
5. PRODUCT SPECIFICATION : PS-35180-002

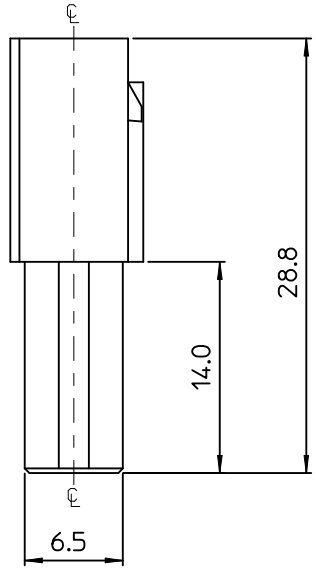

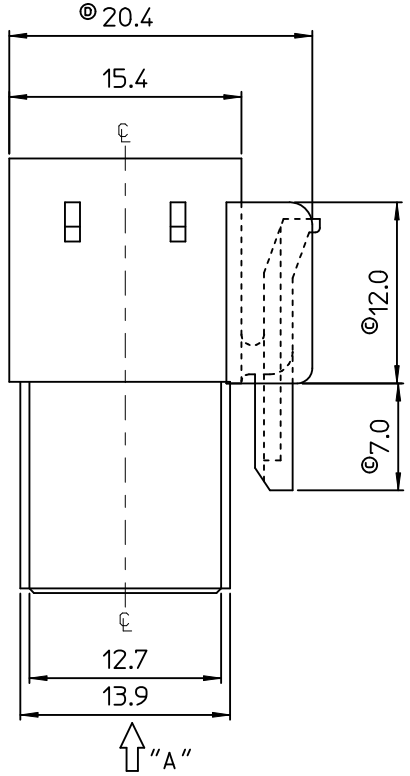

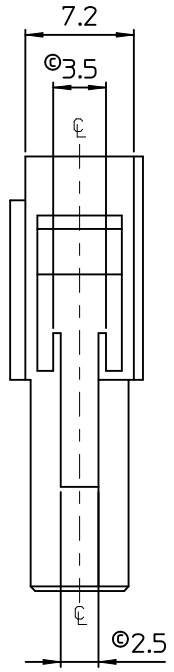

No.	PBT(UL94V-0)		©PC/PET(UL94V-0)	
	MATERIAL	COLOR	MATERIAL	COLOR
1	35965-0210	NATURAL	35965-9210	NATURAL
2	35965-0212	RED	35965-9212	RED
3	35965-0213	YELLOW	35965-9213	YELLOW
4	35965-0214	BLUE	35965-9214	BLUE

REVISED
EC NO: KOR2010-0186 2010/05/17
DRWN:JHPARK01 2010/05/17
CH'KD:SHCHU 2010/05/18
APPR:YUNSIKKIM
DESCRIPTION
REV
D

QUALITY SYMBOLS
▼=0
Ⓒ=0

GENERAL TOLERANCES (UNLESS SPECIFIED)

	mm	INCH
4 PLACES	± ---	± ---
3 PLACES	± ---	± ---
2 PLACES	± ---	± ---
1 PLACE	± 0.3	± ---
ANGULAR ± 1 °		

DRAFT WHERE APPLICABLE MUST REMAIN WITHIN DIMENSIONS

DIMENSION STYLE: MM ONLY
SCALE: 3:1
DESIGN UNITS: METRIC
THIRD ANGLE PROJECTION

DRAWN BY: JS.KANG DATE: 1995/09/28
CHECKED BY: BK.CHOI DATE: 1995/09/28
APPROVED BY: CW.LEE DATE: 1995/09/28
MATERIAL NO.: SEE TABLE

TITLE: 070 MULTI FEMALE HSG 2P(B)

molex MOLEX INCORPORATED

DOCUMENT NO.: SD-35965-021*
SHEET NO.: 1 OF 01

SIZE A3

THIS DRAWING CONTAINS INFORMATION THAT IS PROPRIETARY TO MOLEX INCORPORATED AND SHOULD NOT BE USED WITHOUT WRITTEN PERMISSION