This document was generated on 04/15/2010

PLEASE CHECK WWW.MOLEX.COM FOR LATEST PART INFORMATION

Part Number: 0353280560

Status: Active

Description: 7.92mm (.312") Pitch Header, Vertical, Positive Lock, Shrouded, 5 Circuits, White, PA Polyamide (Nylon) 6/6, Glass-filled

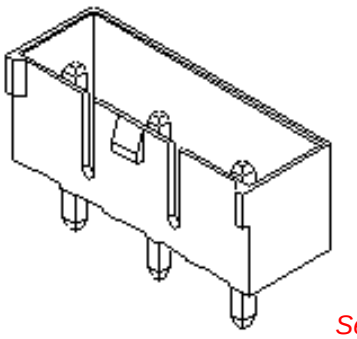

Series image - Reference only

Documents:

3D Model
Drawing (PDF)
Product Specification PS-35156-005 (PDF)
RoHS Certificate of Compliance (PDF)

Agency Certification

CSA	LR19980
TUV	R72081037
UL	E29179

General

Product Family	PCB Headers
Series	35328
Application	Wire-to-Board
Product Name	N/A

Physical

Breakaway	No
Circuits (Loaded)	5
Circuits (maximum)	5
Color - Resin	Natural
Durability (mating cycles max)	30
First Mate / Last Break	No
Flammability	94V-0
Glow-Wire Compliant	No
Guide to Mating Part	No
Keying to Mating Part	None
Lock to Mating Part	Yes
Material - Plating Mating	Tin
Material - Plating Termination	Tin
Material - Resin	Nylon
Number of Rows	1
Orientation	Vertical
PC Tail Length (in)	0.134 In
PC Tail Length (mm)	3.40 mm
PCB Locator	No
PCB Retention	None
PCB Thickness Recommended (in)	0.062 In
PCB Thickness Recommended (mm)	1.60 mm
Packaging Type	Bag
Pitch - Mating Interface (in)	0.312 In
Pitch - Mating Interface (mm)	7.92 mm
Plating min: Mating (µin)	200
Plating min: Mating (µm)	5
Plating min: Termination (µin)	200
Plating min: Termination (µm)	5
Polarized to Mating Part	Yes
Polarized to PCB	No
Shrouded	Partial
Stackable	No
Surface Mount Compatible (SMC)	Yes
Temperature Range - Operating	-40°C to +105°C

EU RoHS
ELV and RoHS Compliant
REACH SVHC
Not Reviewed
Halogen-Free Status
Not Halogen-Free

China RoHS

Need more information on product environmental compliance?

Email productcompliance@molex.com
For a multiple part number RoHS Certificate of Compliance, click here

Please visit the Contact Us section for any non-product compliance questions.

Search Parts in this Series
35328Series

Mates With
35156 Wire-to-Board Housing

Termination Interface: Style	Through Hole

Electrical

Current - Maximum per Contact	7A
Voltage - Maximum	250V

Material Info

Reference - Drawing Numbers

Product Specification	PS-35156-005
Sales Drawing	SD-35328-001

This document was generated on 04/15/2010

PLEASE CHECK WWW.MOLEX.COM FOR LATEST PART INFORMATION

DWG. NO. SD-35328-001
SIMILAR ITEM 35328-**1*
PROJECT NO. —

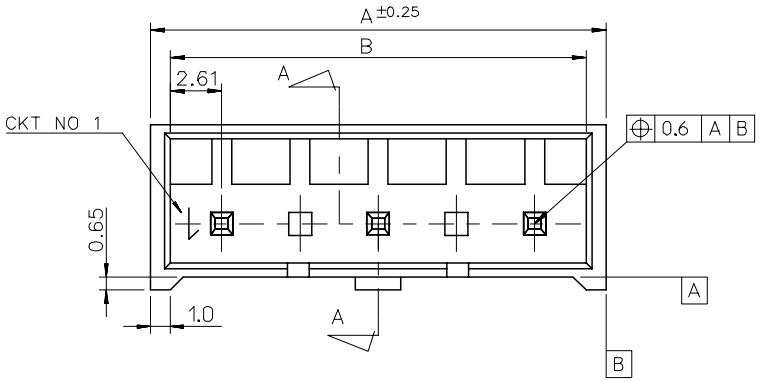

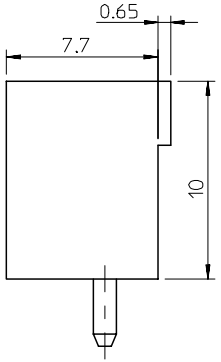

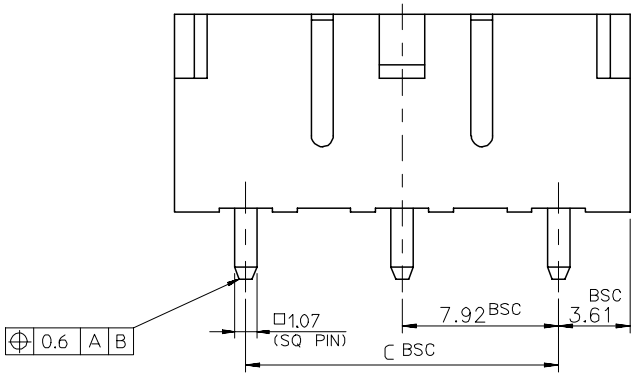

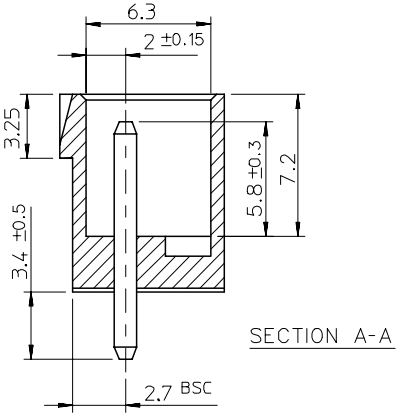

SECTION A-A

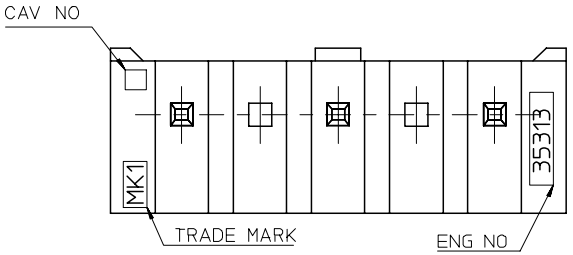

NOTE

1. MATERIAL : WAFER : NYLON66, GLASS FILLED 20%
   PIN : BRASS, TIN PLATED

2. LEGEND

35328-** 6 *
- COLOR : 0 - NATURAL
  1 - BLACK
  2 - RED
  3 - YELLOW
  4 - BLUE
- CKT NO.(02,03,04...)

3. THIS PRODUCT SHALL BE COMPLIED WITH RoHS COMPATIBLE(LEAD FREE SOLDERABILITY)

39.6	44.82	46.82	35328066*	35328-066*	6
31.68	36.9	38.9	35328056*	-056*	5
23.76	28.98	30.98	35328046*	-046*	4
15.84	21.06	23.06	35328036*	-036*	3
7.92	13.14	15.14	35328026*	35328-026*	2
C	B	A	MAT'L NO.	ENG NO.	CKT NO.

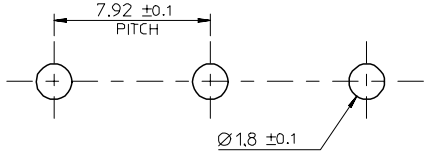

P.C.BOARD LAYOUT
THK. : 1.6t

REVISED	EC NO.	DRWN	CH'K	APPR	DESCRIPTION	REV
	KOR2006-0105	K.S.KIM	K.S.KIM	Y.Soo.KIM		
	06/03/23					
						C

QUALITY SYMBOLS
MAJOR =
CRITICAL (C) =

GENERAL TOLERANCES: (UNLESS SPECIFIED)

	mm	INCH
4 PLACES	±0.	±.
3 PLACES	±0.	±.
2 PLACES	±0. 2	±.
1 PLACE	±0. 2	±.
ANGULAR: ± 2 °		

DRAFT WHERE APPLICABLE MUST REMAIN WITHIN DIMENSIONS

SCALE 3.5-1 | DESIGN UNITS ☒mm ☐INCH | THIRD ANGLE PROJECTION | DIMENSIONS: ☐mm/INCH ☐INCH/mm ☒mm ONLY | SHT | REV | REVISE ON CAD ONLY

DRAWN BY & DATE K.S.KIM (041228)
CHECKED BY & DATE Y.Soo.KIM
APPROVED BY & DATE S.H.CHOI

TITLE: 7.92 PITCH W/B CONN. WAFER ASS'Y (WITH LOCK)

MOLEX INCORPORATED

CAD FILENAME	MATERIAL NO.	DRAWING NO.	SHEET NO.
SD-35328-001	SEE TABLE	SD-35328-001	1 OF 1

THIS DRAWING CONTAINS INFORMATION THAT IS PROPRIETARY TO MOLEX INCORPORATED AND SHOULD NOT BE USED WITHOUT WRITTEN PERMISSION.

SIZE B

DO NOT SCALE DRAWING
DIMENSION IN METRIC

MX-A3