This document was generated on 04/13/2010

PLEASE CHECK WWW.MOLEX.COM FOR LATEST PART INFORMATION

Part Number: 0353010650

Status: Active

Description: 2.50mm (.098") Pitch SPOX™ Wire-to-Board Header, Vertical, Shrouded, Tube Packaged Version of 5267, 6 Circuits, Tin (Sn) Plating, with Swaged PC Tails

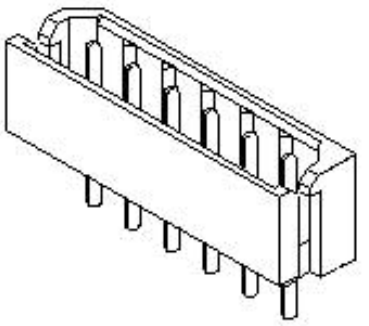

Series image - Reference only

Documents:

3D Model
Drawing (PDF)
Product Specification PS-35301-001 (PDF)
RoHS Certificate of Compliance (PDF)

Agency Certification

CSA	LR 19980
UL	E29179

General

Product Family	PCB Headers
Series	35301
Application	Wire-to-Board
Product Name	SPOX™

Physical

Breakaway	No
Circuits (Loaded)	6
Circuits (maximum)	6
Color - Resin	Natural
Durability (mating cycles max)	30
First Mate / Last Break	No
Flammability	94V-0
Glow-Wire Compliant	No
Guide to Mating Part	No
Keying to Mating Part	None
Lock to Mating Part	Yes
Material - Plating Mating	Tin
Material - Plating Termination	Tin
Material - Resin	Nylon
Number of Rows	1
Orientation	Vertical
PCB Locator	No
PCB Retention	Yes
PCB Thickness Recommended (in)	0.062 In
PCB Thickness Recommended (mm)	1.60 mm
Packaging Type	Tube
Pitch - Mating Interface (in)	0.098 In
Pitch - Mating Interface (mm)	2.50 mm
Plating min: Mating (µin)	160
Plating min: Mating (µm)	4
Plating min: Termination (µin)	160
Plating min: Termination (µm)	4
Polarized to Mating Part	Yes
Polarized to PCB	No
Shrouded	Partial
Stackable	No
Surface Mount Compatible (SMC)	No
Temperature Range - Operating	-40°C to +105°C
Termination Interface: Style	Through Hole

Electrical

EU RoHS
ELV and RoHS Compliant
REACH SVHC
Not Reviewed
Halogen-Free Status
Not Reviewed

China RoHS

Need more information on product environmental compliance?

Email productcompliance@molex.com
For a multiple part number RoHS Certificate of Compliance, click here

Please visit the Contact Us section for any non-product compliance questions.

Search Parts in this Series
35301Series

Mates With
5264 SPOX™ Wire-to-Board Crimp Housing. 42219 SPOX™ IDT Receptacle Housing

Current - Maximum per Contact	3A
Voltage - Maximum	250V

Material Info

Reference - Drawing Numbers

Product Specification	PS-35301-001
Sales Drawing	SD-35301-001, SD-35301-012

This document was generated on 04/13/2010
PLEASE CHECK WWW.MOLEX.COM FOR LATEST PART INFORMATION

DWG. NO. SD-35301-001

SIMILAR ITEM

PROJECT NO.

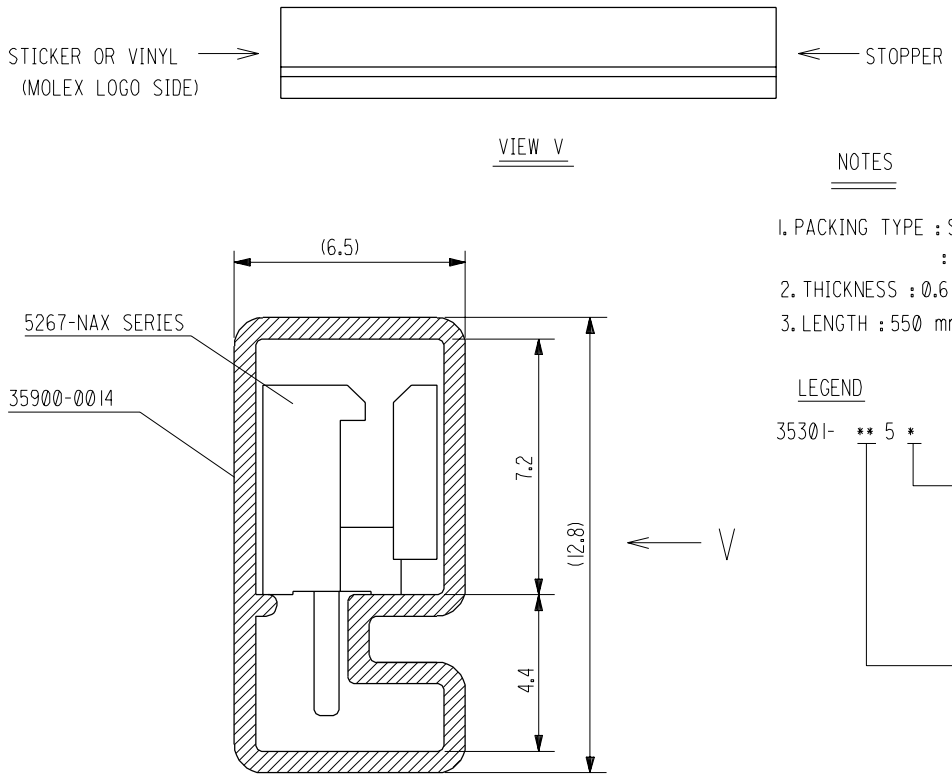

NOTES

1. PACKING TYPE : STOPPER & STICKER LOCKING TYPE(GENERAL)
   : VINYL & STOPPER LOCKING TYPE(FOR S/S)
2. THICKNESS : 0.6 †
3. LENGTH : 550 mm

LEGEND

35301- ** 5 *

- COLOR : 0 --- NATURAL
  1 --- BLACK
  2 --- RED
  3 --- YELLOW
  4 --- BLUE
- CKT (02 , 03 , 04 ....)

CKTS	ENG NO.	MAT'L NO.	Q'TY/TUBE
15	35301-155*	35301155*	10
14	-145*	35301145*	10
13	-135*	35301135*	15
12	-125*	35301125*	15
11	-115*	35301115*	15
10	-105*	35301105*	15
9	-095*	35301095*	20
8	-085*	35301085*	20
7	-075*	35301075*	25
6	-065*	35301065*	30
5	-055*	35301055*	35
4	-045*	35301045*	40
3	-035*	35301035*	50
2	35301-025*	35301025*	70

NEW RELEASED
EC NO. KOR2001-0048
DRWN: K.S.KIM (011130)
CH'K: J.K.OH
APPR: C.W.LEE

DESCRIPTION

A

REV

QUALITY SYMBOLS
MAJOR =
CRITICAL (C) =

GENERAL TOLERANCES: (UNLESS SPECIFIED)

	mm	INCH
4 PLACES	±0.	±.
3 PLACES	±0.	±.
2 PLACES	±0.	±.
1 PLACE	±0.4	±.

ANGULAR: ± 3 °

DRAFT WHERE APPLICABLE MUST REMAIN WITHIN DIMENSIONS

SCALE: NONE
DESIGN UNITS: ☒mm ☐INCH
THIRD ANGLE PROJECTION
DIMENSIONS: ☐mm/INCH ☐INCH/mm ☒mm ONLY
SHT | REV
REVISE ON CAD ONLY

DRAWN BY & DATE: K.S.KIM (011130)
CHECKED BY & DATE: J.K.OH
APPROVED BY & DATE: C.W.LEE

TITLE:
TUBE PACKAGED
FOR 5267-NAX SERIES

MOLEX INCORPORATED
KOREA

CAD FILENAME: SD35301A.dgn
MATERIAL NO.: SEE TABLE
DRAWING NO.: SD-35301-001
SHEET NO.: 1 OF 1

THIS DRAWING CONTAINS INFORMATION THAT IS PROPRIETARY TO MOLEX INCORPORATED AND SHOULD NOT BE USED WITHOUT WRITTEN PERMISSION.

SIZE A

MX-A4

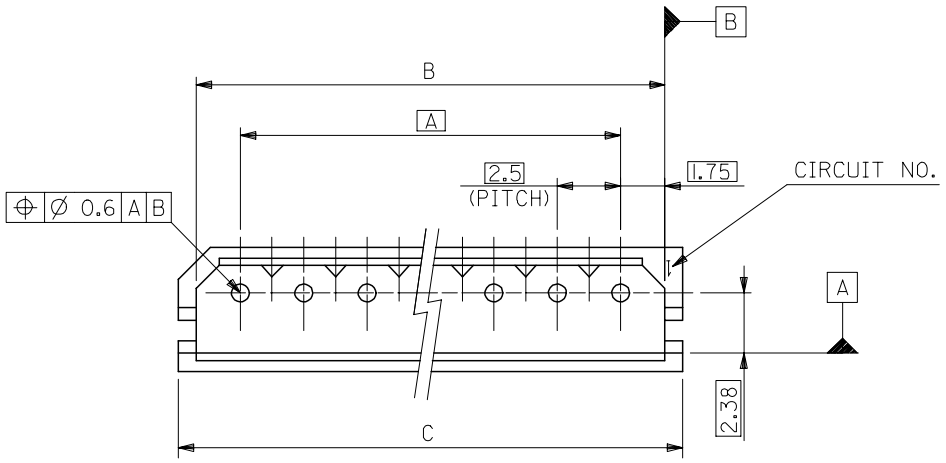

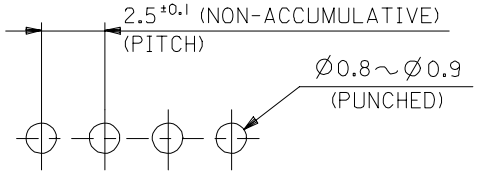

RECOMMENDED P.C.BOARD HOLE DIM.
(t=1.6)

NOTES:
1. MATES WITH : 5264 SERIES.
2. APPLIES : PIN, BOTH ENDS

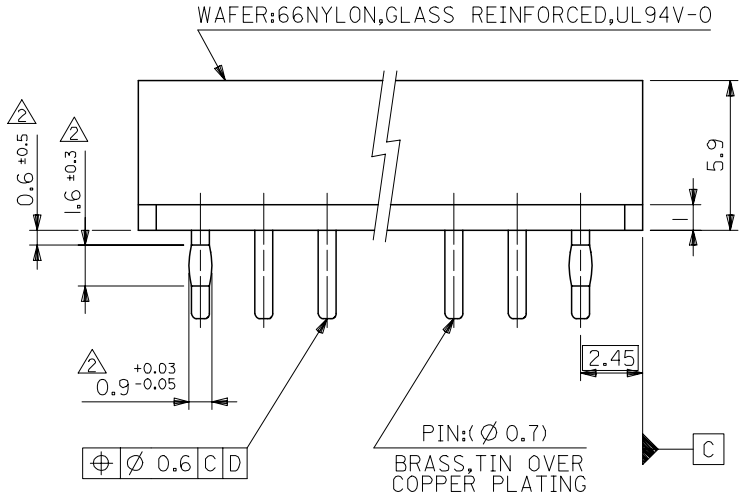

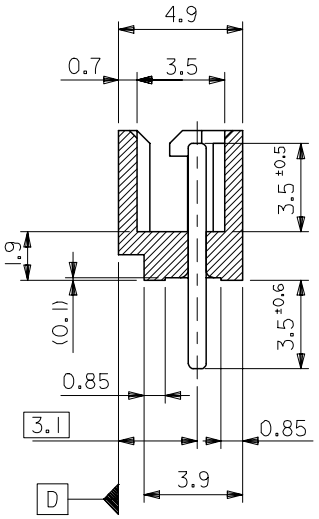

39.9	38.5	35	99-99-0999	5267-15A-X	35301-1550	15
37.4	36	32.5	-0998	-14A-X	35301-1450	14
34.9	33.5	30	-0997	-13A-X	35301-1350	13
32.4	31	27.5	-0996	-12A-X	35301-1250	12
29.9	28.5	25	-0995	-11A-X	35301-1150	11
27.4	26	22.5	-0994	-10A-X	35301-1050	10
24.9	23.5	20	-0993	-09A-X	35301-0950	9
22.4	21	17.5	-0992	-08A-X	35301-0850	8
19.9	18.5	15	-0991	-07A-X	35301-0750	7
17.4	16	12.5	-0990	-06A-X	35301-0650	6
14.9	13.5	10	-0989	-05A-X	35301-0550	5
12.4	11	7.5	-0988	-04A-X	35301-0450	4
9.9	8.5	5	-0987	-03A-X	35301-0350	3
7.4	6	2.5	99-99-0986	5267-02A-X	35301-0250	2
C	B	A	EDP NO.	ENG NO.	ENG NO.	NO OF CKT.
			APPLIED CONNECTOR			

ANGLE	±3°
30 OVER	±0.3
10 OVER 30 UNDER	±0.25
10 UNDER	±0.2
GENERAL TOLERANCES	

REV	DESCRIPTION	ECN NO.	DRWN	CHK	APPR
A	NEW RELEASED	KOR2006-0082 (060102)	K.S.KIM	Y.Soo.KIM	S.H.CHOI

QUALITY SYMBOLS
MAJOR =
CRITICAL C -

GENERAL TOLERANCES: (UNLESS SPECIFIED)

	mm	INCH
4 PLACES	±0.	± -
3 PLACES	±0.	± -
2 PLACES	±0.	± -
1 PLACE	±0.	± -
ANGULAR: ± °		

DRAFT WHERE APPLICABLE MUST REMAIN WITHIN DIMENSIONS

SCALE 5:1 | DESIGN UNITS ☐mm ☐INCH | THIRD ANGLE PROJECTION

DIMENSIONS: ☐mm/INCH ☐INCH/mm ☐mm ONLY | SHT | REV | REVISE ON CAD ONLY

DRAWN BY & DATE: K.S.KIM (060102)
CHECKED BY & DATE: Y.Soo.KIM
APPROVED BY & DATE: S.H.CHOI
CAD FILENAME

TITLE: 2.5 LOW PROFILE WAFER ASS'Y WITH COIN

MOLEX INCORPORATED

MATERIAL NO. | DRAWING NO. SD-35301-012 | SHEET NO. 1 OF 1

THIS DRAWING CONTAINS INFORMATION THAT IS PROPRIETARY TO MOLEX INCORPORATED AND SHOULD NOT BE USED WITHOUT WRITTEN PERMISSION.

SIZE B

KOREA MX-A3

DO NOT SCALE DRAWING
DIMENSION IN METRIC

DWG. NO. | SIMILAR ITEM | PROJECT NO.