This document was generated on 06/07/2010

PLEASE CHECK WWW.MOLEX.COM FOR LATEST PART INFORMATION

Part Number: 0351830417

Status: Active

Description: 8.00/10.00mm (.315/.394") Pitch, 2.36 Dia. Pin Housing, 4 Circuits

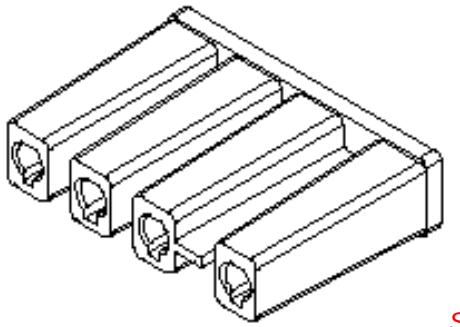

Series image - Reference only

Documents:

3D Model
Drawing (PDF)
Product Specification PS-35183-001 (PDF)
RoHS Certificate of Compliance (PDF)

Agency Certification

CSA	LR19980
TUV	R72081037
UL	E29179

General

Product Family	Crimp Housings
Series	35183
Product Name	N/A

Physical

Circuits (maximum)	4
Flammability	94V-1
Gender	Female
Glow-Wire Compliant	No
Number of Rows	1
Packaging Type	Bag
Panel Mount	No
Pitch - Mating Interface (in)	0.315 In, 0.394 In
Pitch - Mating Interface (mm)	10.00 mm, 8.00 mm
Temperature Range - Operating	-25°C to +85°C

Material Info

Reference - Drawing Numbers

Product Specification	PS-35183-001
Sales Drawing	SD-35183-041

EU RoHS
ELV and RoHS Compliant
REACH SVHC
Not Reviewed
Halogen-Free Status
Halogen-Free

China RoHS

Need more information on product environmental compliance?

Email productcompliance@molex.com
For a multiple part number RoHS Certificate of Compliance, click here

Please visit the Contact Us section for any non-product compliance questions.

Search Parts in this Series
35183Series

Mates With
35309

Use With
35716

This document was generated on 06/07/2010

PLEASE CHECK WWW.MOLEX.COM FOR LATEST PART INFORMATION

MATERIAL NO.	ENG NO.	MATERIAL	COLOR
351830411	35183-0411	NORYL,UL94V-0	BLACK
351830417	35183-0417	NORYL,UL94V-1	GRAY

NOTES

1. APPLICABLE TERMINALS: 35716-0110, 35716-0310
   35716-0190, 35716-0193
2. MATED WAFER ASSEMBLY: 35309-0410

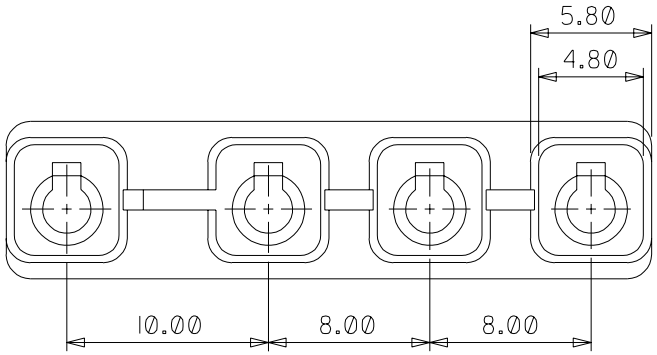

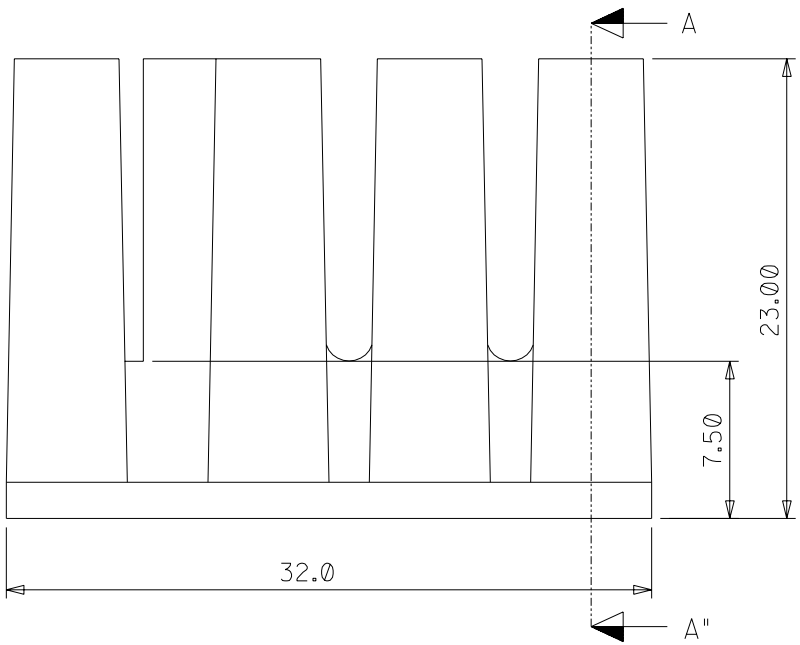

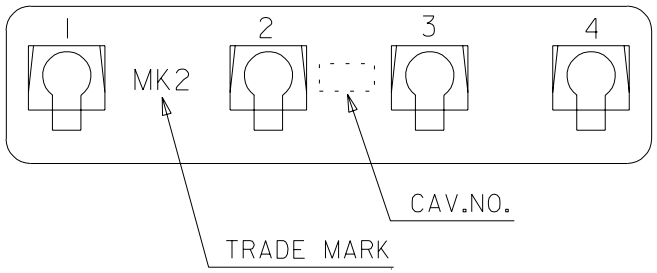

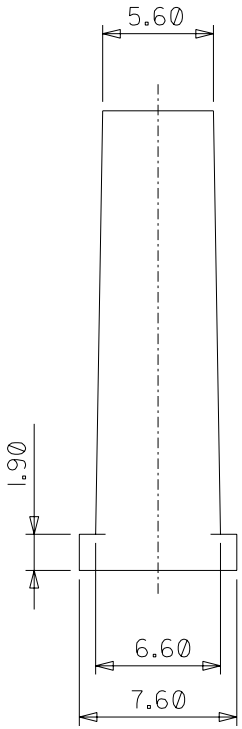

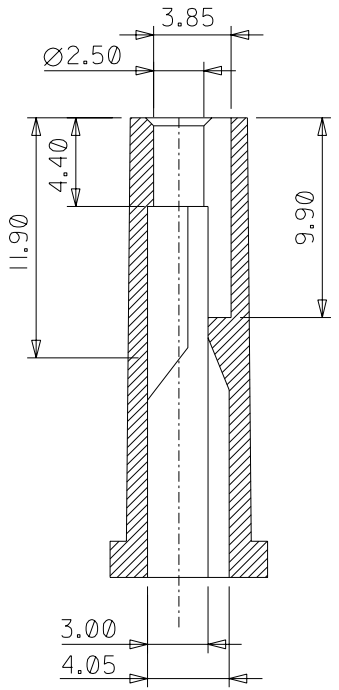

SECTION A-A"

REVISED	DESCRIPTION
EC NO. KOR2002-0151 DRWN: C.B.CHIN 02/06/07 CH'K: W.Y.YNAG APPR: C.W.LEE	
C2	REV

QUALITY SYMBOLS
MAJOR ▼ = 0
CRITICAL (C) = 0

GENERAL TOLERANCES: (UNLESS SPECIFIED)

	mm	INCH
4 PLACES	±0.	±.
3 PLACES	±0.	±.
2 PLACES	±0.30	±.
1 PLACE	±0.30	±.
ANGULAR: ± °		

DRAFT WHERE APPLICABLE MUST REMAIN WITHIN DIMENSIONS

SCALE 4:1 | DESIGN UNITS ☒mm ☐INCH | THIRD ANGLE PROJECTION | DIMENSIONS: ☐mm/INCH ☐INCH/mm ☒mm ONLY | SHT | REV | REVISE ON CAD ONLY

DRAWN BY & DATE: W.Y.YANG 95/01/17
CHECKED BY & DATE: B.K.CHOI 95/01/17
APPROVED BY & DATE: C.W.LEE 95/01/17

TITLE: 2.36 HOUSING-4P

molex MOLEX INCORPORATED

CAD FILENAME: S1830417.DGN | MATERIAL NO.: SEE CHART | DRAWING NO.: SD-35183-041 | SHEET NO.: 1OF1

THIS DRAWING CONTAINS INFORMATION THAT IS PROPRIETARY TO MOLEX INCORPORATED AND SHOULD NOT BE USED WITHOUT WRITTEN PERMISSION.

SIZE B

MX-A3

DWG. NO. SD-35183-041
SIMILAR ITEM
PROJECT NO.
DO NOT SCALE DRAWING
DIMENSION IN METRIC