0283 SERIES

The 283 filter is a compact, single phase, high current device with very good common mode and differential mode insertion loss. It is very useful in power control systems where the ground coil will help eliminate system ground loop noise.

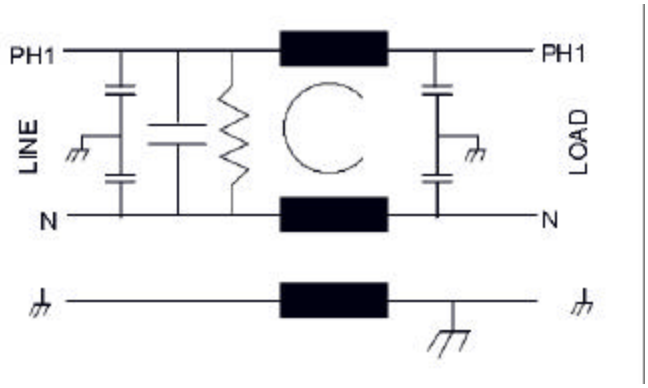

Operating voltage = 115/250 Vac
Operating current = 20, 30 Amp
Operating frequency = 50/60Hz
Operating temperature = -20o to 50o C
Diel. withstanding (line - case) = 1500 Vac
Diel. withstanding (line - line) = 1500 Vdc
Leakage current = 1.5 ma at 250 Vac, 60 Hz
Max residual voltage after 1 sec. = 30 Volts
Agency approvals = UL -- E60380
CSA -- LR50822-3, -135, -136
VDE -- 12819-4730-1014 A1G

Ordering Information
20 AMPS KK-0283-20
KK-0283-20M (METRIC)
30 AMPS KK-0283-30
KK-0283-30M (METRIC)

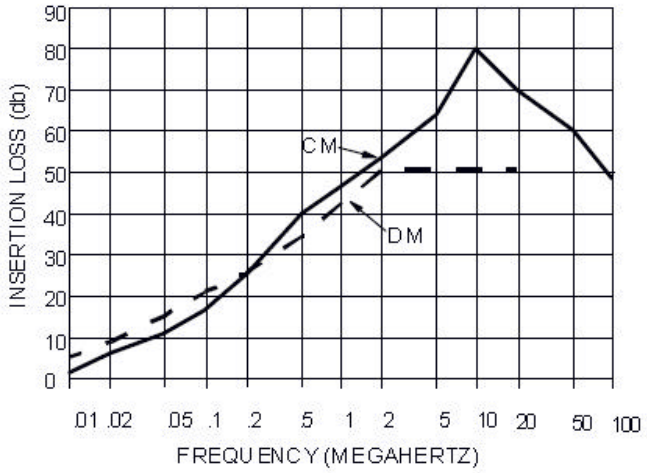

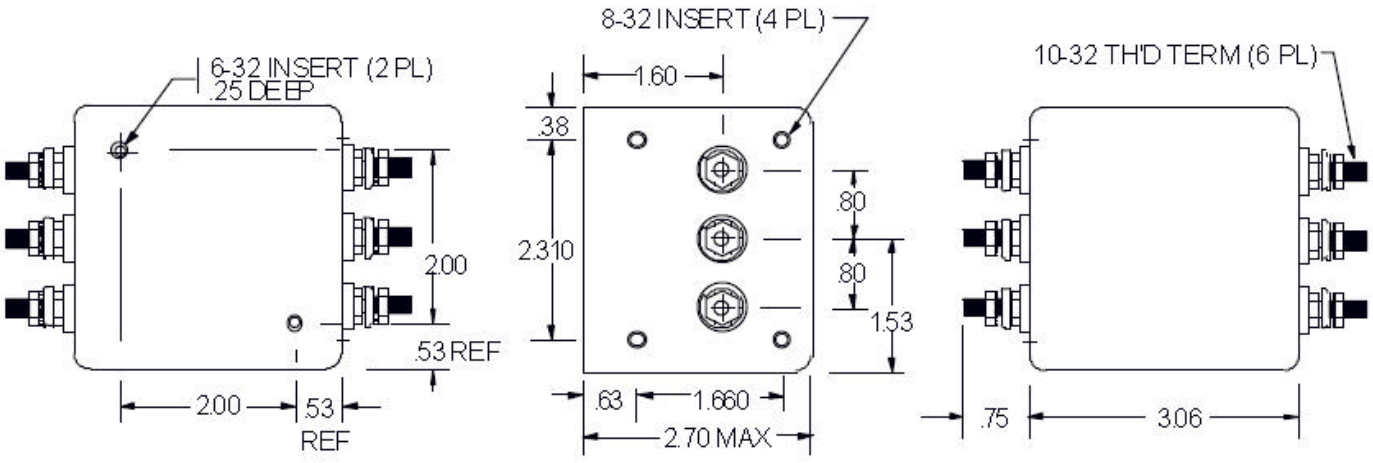

USA JMK Inc 15 Caldwell Dr. Amherst, NH 03031 PH: 603 886-4100 FX: 603 886-4115
email: info@jmkfilters.com
EUR JMK Ltd Glasgow G13 1DN Scotland UK PH: 44-(0) 7785310729 Fax: 44-(0) 141 589 1884