molex
one company > a world of innovation

This document was generated on 06/01/2010

PLEASE CHECK WWW.MOLEX.COM FOR LATEST PART INFORMATION

Part Number: 0260010302
Status: Active
Overview: ribbon_cable_jumpers
Description: 2.54mm (.100") Pitch Board-to-Board Ribbon Cable Jumper - 24 AWG, Solid Tinned, 3 Circuits, Kinked Tails, 0.051m (2.00") Length

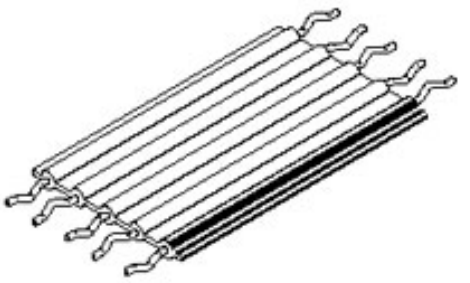

Series image - Reference only

Documents:
Drawing (PDF)
RoHS Certificate of Compliance (PDF)

General

Product Family	Cable
Series	26001
Crimp Quality Equipment	Yes
Geographic Area	Asia
Overview	ribbon_cable_jumpers
Product Name	Ribbon

Physical

Cable Length	0.051m (2.00")
Circuits (Loaded)	3
Circuits (maximum)	3
Insulation	PVC
Packaging Type	Bag
Pitch - Term. Interface (in)	0.100 In
Pitch - Term. Interface (mm)	2.54 mm
Temperature Range - Operating	-20°C to +105°C
Wire Size AWG	24
Wire/Cable Type	(1x24) Solid, Tinned

Electrical

Current - Maximum per Contact	N/A
Voltage - Maximum	300V

Material Info

Reference - Drawing Numbers

Sales Drawing	SD-26001-001

EU RoHS
ELV and RoHS Compliant
REACH SVHC
Not Reviewed
Halogen-Free Status
Not Reviewed

China RoHS

Need more information on product environmental compliance?

Email productcompliance@molex.com
For a multiple part number RoHS Certificate of Compliance, click here

Please visit the Contact Us section for any non-product compliance questions.

Search Parts in this Series
26001Series

This document was generated on 06/01/2010

PLEASE CHECK WWW.MOLEX.COM FOR LATEST PART INFORMATION

CABLE SPECIFICATIONS:

1.– STANDARD KINKED JUMPER SERIES #26001 (24545 CABLE, .128" S/R BOTH ENDS)

2.– PHYSICAL

CONDUCTOR SPACING ---------- .100" (2.54mm) ℄ TO ℄
WIRE GAUGE ---------- 24 AWG (1/24), SOLID TINNED
INSULATION ---------- PVC (MOLEX GRAY)
EDGE MARK COLOR ---------- RED

3.– AGENCY

U.L. STYLE ---------- 2651
TEMPERATURE RATING ---------- -20 °C TO 105 °C
VOLTAGE RATING ---------- 300V. MAX.
FLAMMABILITY RATING ---------- VW-1

4.– SPECIAL REQUIREMENT

RoHS AND LEAD FREE COMPLIANT
NO TEXT MARKING ON FCB

5.– GENERAL

NON-OPERATING TEMPERATURE___-20°C TO 105°C

6.– SOLDERING CONDITION (B1)

SOLDER TEMPERATURE_____260°C. MAX.
SOLDERING TIME_____3 SECOND, MAX.
INSULATION SHRINK_____2MM. NOM

PCB HOLE LAYOUT
RECOMENDED HOLE DIA. .042 In.

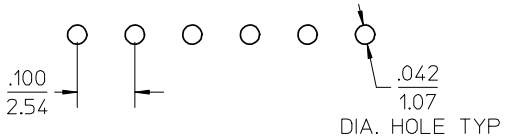

NOTES:

1.- ADD 0.020" TO QTY. OF CABLE.

2.- STRIP OF CABLE MUST BE 0.138" TO REMAIN 0.128" AFTER KINK ON EACH END.

STRIP & KINK

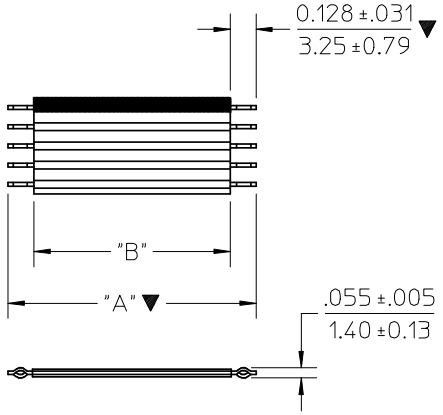

OVERALL LENGTH ("A") TOLERANCE FOR OAL +/-.100" INSUALTION LENGTH ("B" REF.) DIMS "A" & "B" REFERS TO SHOWN IN MATRIX.

MATRIX FOR STANDARD KINKED JUMPER SERIES # 26001 (24545 CABLE)

LENGTH "A" (±.100")	1.256"	2.256"	3.256"	4.256"	5.256"	6.256"	7.256"	8.256"
LENGTH "B" (REF.) / CIRCUITS	1.000"	2.000"	3.000"	4.000"	5.000"	6.000"	7.000"	8.000"
3	26001-0301	26001-0302	26001-0303	26001-0304	26001-0305	26001-0306	26001-0307	26001-0308
4	26001-0401	26001-0402	26001-0403	26001-0404	26001-0405	26001-0406	26001-0407	26001-0408
5	26001-0501	26001-0502	26001-0503	26001-0504	26001-0505	26001-0506	26001-0507	26001-0508
6	26001-0601	26001-0602	26001-0603	26001-0604	26001-0605	26001-0606	26001-0607	26001-0608
7	26001-0701	26001-0702	26001-0703	26001-0704	26001-0705	26001-0706	26001-0707	26001-0708
8	26001-0801	26001-0802	26001-0803	26001-0804	26001-0805	26001-0806	26001-0807	26001-0808
9	26001-0901	26001-0902	26001-0903	26001-0904	26001-0905	26001-0906	26001-0907	26001-0908
10	26001-1001	26001-1002	26001-1003	26001-1004	26001-1005	26001-1006	26001-1007	26001-1008

26001-××××
A B C

A = STD. KINKED JUMPER I.D. No

B = CIRCUIT SIZE
3 THRU 10

C = DENOTES LENGTH
1.000" TO 8.000"

REV. HISTORY	EC NO.	DETAIL	DATE
B	E-07-0793	B_1: ADD GENERAL & SOLDERING CONDITION DATA	07/12/07
A	THL2006-0004	NEW RELEASE	06/06/01

SEE CHANGE DETAIL
EC NO: THL2008-0019 2007/12/07
DRWN:CPANSAKHOM 2007/12/11
CH'KD:NCHALERM 2007/12/20
APPR:SVIRATJAPOL
DESCRIPTION
B
REV

QUALITY SYMBOLS
▼=3
▽(C)=0

GENERAL TOLERANCES (UNLESS SPECIFIED)

	mm	INCH
4 PLACES	± ---	± ---
3 PLACES	± ---	± ---
2 PLACES	± ---	± ---
1 PLACE	± ---	± ---
ANGULAR ±---°		

DRAFT WHERE APPLICABLE MUST REMAIN WITHIN DIMENSIONS

DIMENSION STYLE: IN/MM
SCALE: NTS
DESIGN UNITS: INCH
THIRD ANGLE PROJECTION

		DATE
DRAWN BY	CPANSAKHOM	2006/06/01
CHECKED BY	PMEECHAI	2006/06/01
APPROVED BY	SVIRATJAPOL	2006/06/01

TITLE: STANDARD KINKED TAIL JMP .100" CTR PVC INSULATED 24 AWG SOLID TINNED

MOLEX INCORPORATED

MATERIAL NO.: SEE CHART
DOCUMENT NO.: SD-26001-001
SHEET NO.: 1 OF 1
SIZE: A4

THIS DRAWING CONTAINS INFORMATION THAT IS PROPRIETARY TO MOLEX INCORPORATED AND SHOULD NOT BE USED WITHOUT WRITTEN PERMISSION