0237 SERIES

The 237 Series is designed to provide more aggressive performance than the 220 or 221 series. The series has much higher common mode and differential mode filtering.
The low leakage current makes this a very attractive filter for general filtering of all electronic power systems.

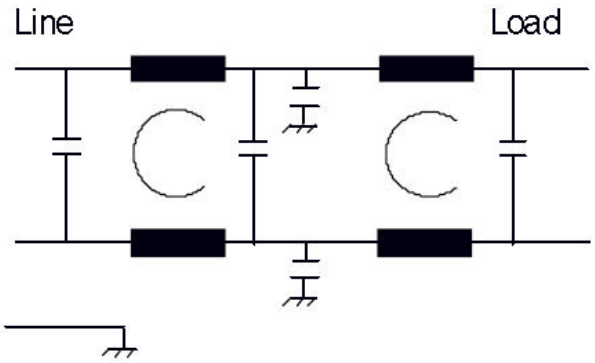

Operating voltage = 115/250 Vac
Operating current = 1, 2, 3, 5, 10 Amp
Operating frequency = 50/60Hz
Operating temperature = -20 to 50 o C
Diel. withstanding (line - case) = 1500 Vac
Diel. withstanding (line - line) = 1500 Vdc
Leakage current = 0.5 ma at 250 Vac, 60 Hz
Max residual voltage after 1 sec. = 30 Volts
Agency approvals = UL, CSA

Ordering Information
AA-0237-1,3,5, or 10 for respective current ratings of 1,3,5,or 10 amps
Use AA for (0.25) tab terms
Use FF for leads

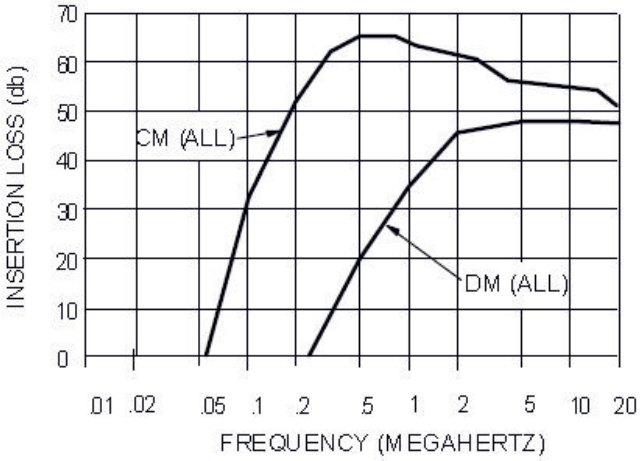

DIMENSIONS (INCHES)

	A	B	C	D	E
1, 2 AMP	2.00	2.38	2.78	1.13	1.75
3,5 AMP	2.50	2.94	3.31	1.13	2.00

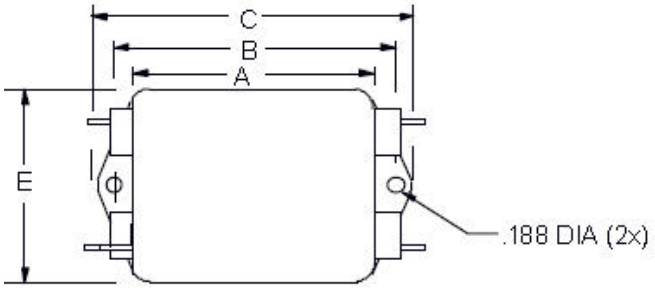

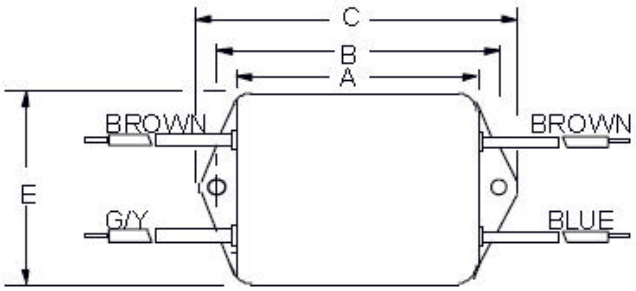

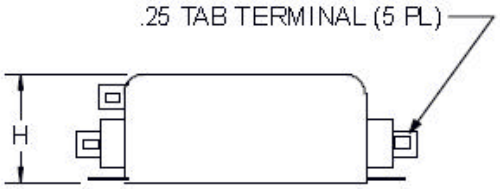



USA JMK Inc 15 Caldwell Dr. Amherst, NH 03031 PH: 603 886-4100 FX: 603 886-4115
email: info@jmkfilters.com
EUR JMK Inc Glasgow G13 1DN Scotland UK PH: 44-(0) 7785310729 Fax: 44-(0) 141 589 1884