This document was generated on 05/18/2010

PLEASE CHECK WWW.MOLEX.COM FOR LATEST PART INFORMATION

Part Number: 0022552103
Status: Active
Overview: cgrid__sl_products
Description: 2.54mm (.100") Pitch SL™ Crimp Housing, Dual Row, Version C, Back Ribs, 10 Circuits

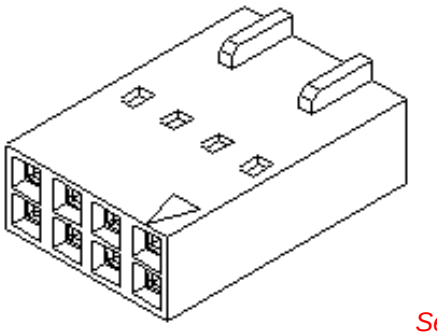

Series image - Reference only

Documents:

- 3D Model
- Drawing (PDF)
- Packaging Specification (PDF)
- Product Specification PS-70058 (PDF)
- Product Specification PS-70400 (PDF)
- RoHS Certificate of Compliance (PDF)

Agency Certification

CSA	LR19980
UL	E29179

General

Product Family	Crimp Housings
Series	70450
Comments	Version C
Overview	cgrid__sl_products
Product Name	SL™

Physical

Breakaway	No
Circuits (maximum)	10
Color - Resin	Black
Flammability	94V-0
Gender	Female
Glow-Wire Compliant	No
Material - Resin	Polyester
Number of Rows	2
Packaging Type	Bag
Panel Mount	No
Pitch - Mating Interface (in)	0.100 In
Pitch - Mating Interface (mm)	2.54 mm
Stackable	Yes
Temperature Range - Operating	-40°C to +105°C

Material Info

Old Part Number	70450-0103

Reference - Drawing Numbers

Packaging Specification	PK-70450-100
Product Specification	PS-70058, PS-70400
Sales Drawing	SD-70450-0100-0125
Test Summary	TS-70058-001

EU RoHS
ELV and RoHS Compliant
REACH SVHC
Not Reviewed
Halogen-Free Status
Not Halogen-Free

China RoHS

Need more information on product environmental compliance?

Email productcompliance@molex.com
For a multiple part number RoHS Certificate of Compliance, click here

Please visit the Contact Us section for any non-product compliance questions.

Search Parts in this Series
70450Series

Mates With
70013 , 70022

Use With
70021 , 70058 , 71851

This document was generated on 05/18/2010

PLEASE CHECK WWW.MOLEX.COM FOR LATEST PART INFORMATION

NOTES:

1) MATERIAL: G.F. POLYESTER
2) HOUSING TO BE USED WITH TERMINALS PT. NO. 70058-**** & 70028-****
3) TO BE USED WITH (0.64)/.025 SQ. OR RD. PINS.
4) REFER TO PRODUCT SPECIFICATION PS-70058.
5) PACKAGE PER PK-70450-100.
6) PARTS CONFORM TO CLASS C OF COSMETIC SPECIFICATION PS-45499-002.

-OPTION "C"-

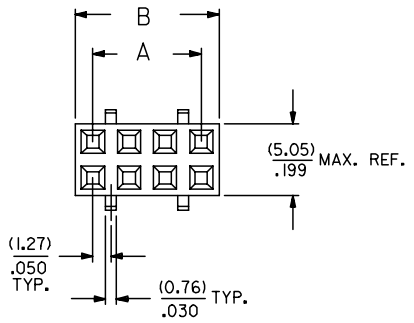

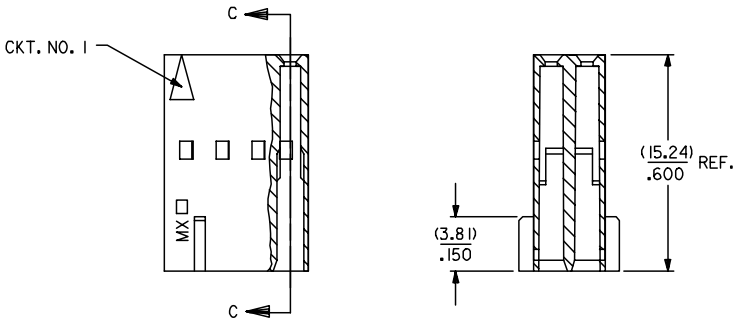

SECTION C-C

CKT. SIZE	EDP. NO.	ENG. NO.	A	B
4	022-55-2043	70450-0100	(2.54) .100	(5.05) .199
6	022-55-2063	70450-0101	(5.08) .200	(7.59) .299
8	022-55-2083	70450-0102	(7.62) .300	(10.13) .399
10	022-55-2103	70450-0103	(10.16) .400	(12.67) .499
12	022-55-2123	70450-0104	(12.70) .500	(15.21) .599
14	022-55-2143	70450-0105	(15.24) .600	(17.75) .699
16	022-55-2163	70450-0106	(17.78) .700	(20.29) .799
18	022-55-2183	70450-0107	(20.32) .800	(22.83) .899
20	022-55-2203	70450-0108	(22.86) .900	(25.37) .999
22	022-55-2223	70450-0109	(25.40) 1.000	(27.91) 1.099
24	022-55-2243	70450-0110	(27.94) 1.100	(30.45) 1.199
26	022-55-2263	70450-0111	(30.48) 1.200	(32.99) 1.299
28	022-55-2283	70450-0112	(33.02) 1.300	(35.53) 1.399
30	022-55-2303	70450-0113	(35.56) 1.400	(38.07) 1.499
32	022-55-2323	70450-0114	(38.10) 1.500	(40.61) 1.599
34	022-55-2343	70450-0115	(40.64) 1.600	(43.15) 1.699
36	022-55-2363	70450-0116	(43.18) 1.700	(45.69) 1.799
38	022-55-2383	70450-0117	(45.72) 1.800	(48.23) 1.899
40	022-55-2403	70450-0118	(48.26) 1.900	(50.77) 1.999
42	022-55-2423	70450-0119	(50.80) 2.000	(53.31) 2.099
44	022-55-2443	70450-0120	(53.34) 2.100	(55.85) 2.199
46	022-55-2463	70450-0121	(55.88) 2.200	(58.39) 2.299
48	022-55-2483	70450-0122	(58.42) 2.300	(60.93) 2.399
50	022-55-2503	70450-0123	(60.96) 2.400	(63.47) 2.499
52	NOT TOOLED	70450-0124	(63.50) 2.500	(66.01) 2.599
54	NOT TOOLED	70450-0125	(66.04) 2.600	(68.55) 2.699

ADD COSMETIC SPEC 2007/02/23
EC NO: UCP2007-2009 2007/02/23
DRWN:DMORGAN 2007/02/27
CH'KD:MS BARRA
APPR:SMILLER
DESCRIPTION
REV H

QUALITY SYMBOLS
▼=0
▽=0

GENERAL TOLERANCES (UNLESS SPECIFIED)

	mm	INCH
4 PLACES	± ---	± ---
3 PLACES	± ---	± .010
2 PLACES	± 0.25	± .014
1 PLACE	± 0.35	± ---
ANGULAR ±1/2°		

DRAFT WHERE APPLICABLE MUST REMAIN WITHIN DIMENSIONS

DIMENSION STYLE: MM/IN
SCALE: 4:1
DESIGN UNITS: INCH
THIRD ANGLE PROJECTION

DRAWN BY: MJM DATE: 1986/10/22
CHECKED BY: MJM DATE: 1986/10/22
APPROVED BY: WAZ DATE: 1986/10/22

TITLE: HOUSING - CONNECTOR DUAL ROW (2.54)/.100 GRID WITH RIBS

molex MOLEX INCORPORATED

MATERIAL NO.: SEE CHART
DOCUMENT NO.: SD-70450-0100-0125
SHEET NO.: 1 OF 1
SIZE C

THIS DRAWING CONTAINS INFORMATION THAT IS PROPRIETARY TO MOLEX INCORPORATED AND SHOULD NOT BE USED WITHOUT WRITTEN PERMISSION

tb_frame_C_P_ME_T
Rev. E 2006/04/15