LAMINATED TRANSFORMERS

Type EE20 / 6.1 - 0.35VA



AGENCY APPROVALS

1. UL 506, File E113449
2. UL 1585, File E175197 Class 2/3
3. EN61558

- Frequency 50/60Hz
- Potted under vacuum
- Split-bobbin
- Temperature class ta 70°C/B
- Short-circuit-proof (where noted: 1/2/3* under Agency Approvals)
- Weight: 0.024kg
- Packaging unit: 40 pieces (tray)

Primary (V)	Secondary (V / mA)	No-Load Voltage (V)	Schematic No.	Part Number	Agency Approvals
230	6 / 58.0	10.80	1	**020-5423.0**	1/2/3*
230	9 / 39.0	16.50	1	**020-5424.0**	1/2/3*
230	12 / 29.0	21.90	1	**020-5425.0**	1/2/3*
230	15 / 23.0	27.00	1	**020-5426.0**	1/2/3*
230	18 / 19.0	31.50	1	**020-5427.0**	1/2/3*
230	24 / 14.0	41.70	1	**020-5428.0**	1/2/3*
230	2x6 / 29.0	2x10.95	2	**020-5429.0**	1/2/3*
230	2x9 / 19.0	2x15.60	2	**020-5430.0**	1/2/3*
230	2x12 / 14.0	2x20.70	2	**020-5431.0**	1/2/3*
230	2x15 / 12.0	2x26.00	2	**020-5432.0**	1
230	2x18 / 9.5	2x31.20	2	**020-5433.0**	1
230	2x24 / 7.0	2x41.90	2	**020-5434.0**	1
115	6 / 58.0	10.80	1	**020-5411.0**	1/2/3*
115	9 / 39.0	16.50	1	**020-5412.0**	1/2/3*
115	12 / 29.0	21.90	1	**020-5413.0**	1/2/3*
115	15 / 23.0	27.00	1	**020-5414.0**	1/2/3*
115	18 / 19.0	31.50	1	**020-5415.0**	1/2/3*
115	24 / 14.0	41.70	1	**020-5416.0**	1/2/3*
115	2x6 / 29.0	2x10.95	2	**020-5417.0**	1/2/3*
115	2x9 / 19.0	2x15.60	2	**020-5418.0**	1/2/3*
115	2x12 / 14.0	2x20.70	2	**020-5419.0**	1/2/3*
115	2x15 / 12.0	2x26.00	2	**020-5420.0**	1
115	2x18 / 9.5	2x31.20	2	**020-5421.0**	1
115	2x24 / 7.0	2x41.90	2	**020-5422.0**	1

***NOTE:** When checking the approval status of this product with VDE, add the prefix "**BV**" and the suffix "**M**" to the orderable Part Number (these letters will also be found on the part label). **The prefix and suffix are not part of the orderable Part Number.**

Mechanical

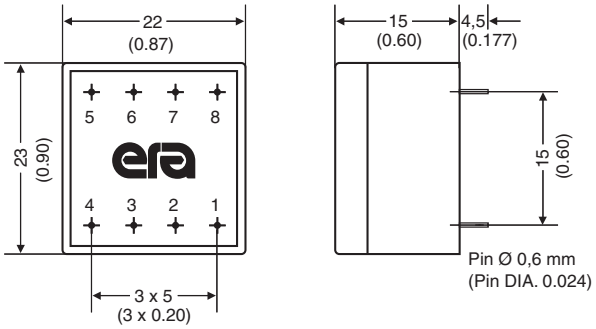

Schematics

