This document was generated on 06/07/2010

PLEASE CHECK WWW.MOLEX.COM FOR LATEST PART INFORMATION

Part Number: 0002082004
Status: Active
Overview: mlx
Description: MLX Crimp Terminal 42023, 14-20 AWG, Bag Tin (Sn)

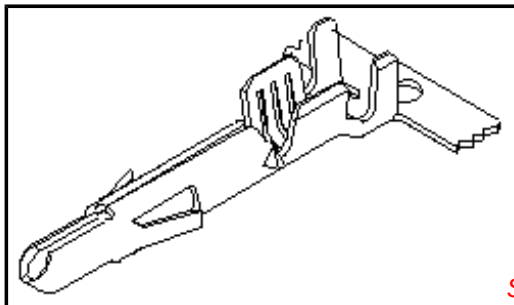

Series image - Reference only

Documents:
Drawing (PDF)
RoHS Certificate of Compliance (PDF)
Product Specification PS-42022-0001 (PDF)

General

Product Family	Crimp Terminals
Series	42023
Crimp Quality Equipment	Yes
MolexKits	Yes
Overview	mlx
Product Name	MLX™

Physical

Gender	Male
Material - Metal	Brass
Material - Plating Mating	Tin
Material - Plating Termination	Tin
Packaging Type	Bag
Plating min: Mating (µin)	20
Plating min: Mating (µm)	0.50
Plating min: Termination (µin)	20
Plating min: Termination (µm)	0.50
Termination Interface: Style	Crimp or Compression
Wire Insulation Diameter	1.52-3.30mm (.060-.130")
Wire Size AWG	14, 16, 18, 20
Wire Size mm²	N/A

Material Info

Old Part Number	42023-2A1L

Reference - Drawing Numbers

Product Specification	PS-42022-0001
Sales Drawing	SD-42023-****

EU RoHS | **China RoHS**
ELV and RoHS Compliant
REACH SVHC
Contains SVHC: No
Halogen-Free Status
Halogen-Free

Need more information on product environmental compliance?

Email productcompliance@molex.com
For a multiple part number RoHS Certificate of Compliance, click here

Please visit the Contact Us section for any non-product compliance questions.

Search Parts in this Series
42023Series

Application Tooling | **FAQ**
Tooling specifications and manuals are found by selecting the products below. Crimp Height Specifications are then contained in the Application Tooling Specification document.
Global

Description	Product #
Extraction Tool	0011010168
HAND CRIMP TOOL	0638116800

This document was generated on 06/07/2010

PLEASE CHECK WWW.MOLEX.COM FOR LATEST PART INFORMATION

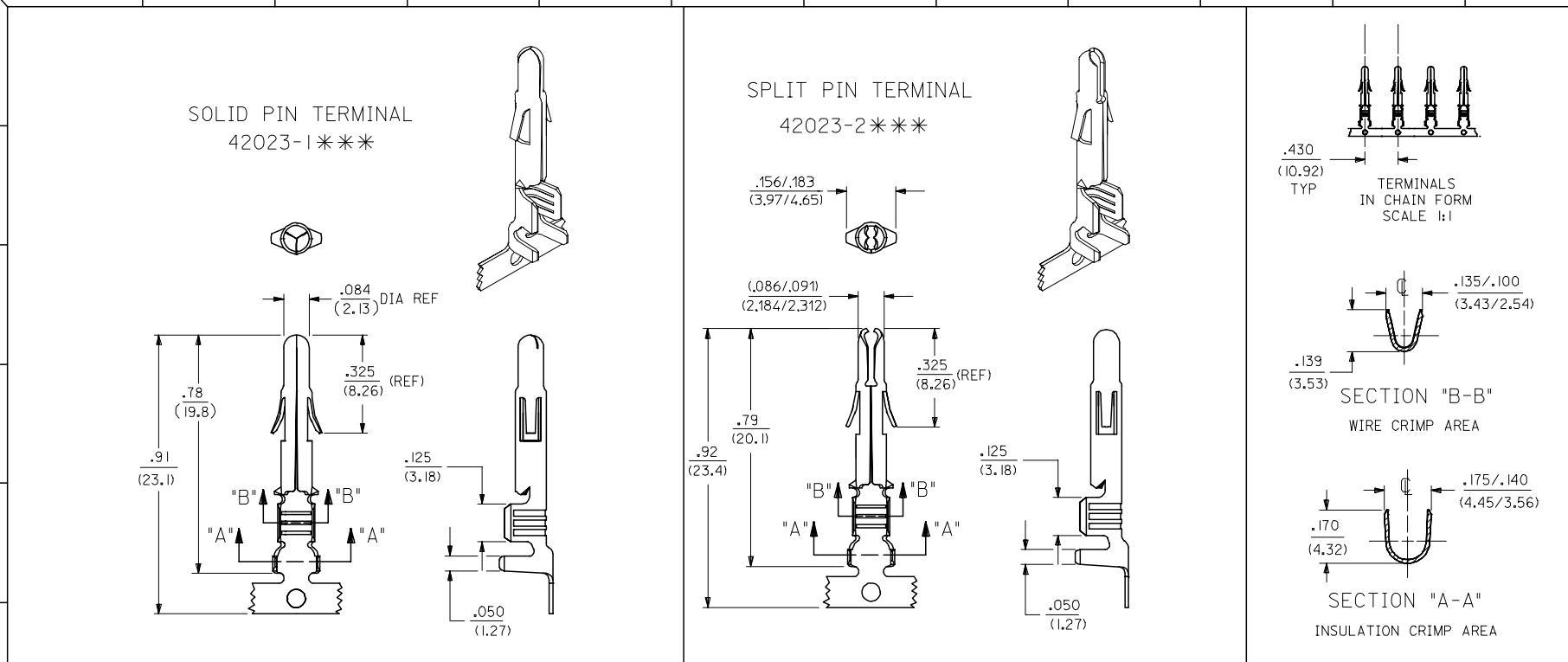

SEE SHEET2 FOR CHART, MATERIAL, PLATING, NOTES, AND CRIMP OPTIONS

EC NO: 12005-0302	QUALITY SYMBOLS	GENERAL TOLERANCES (UNLESS SPECIFIED)	DIMENSION STYLE IN/MM	SCALE 4:1	DESIGN UNITS INCH	THIRD ANGLE PROJECTION	
DRWN: SUDHIR 2004/09/27	▼=0	mm / INCH	DRAWN BY SUDHIR DATE 2004/09/24	TITLE TERMINAL, PIN .084/(2.13) DIA. SERIES			
CH'KD: KPRASAD 2004/09/24	▽=0	4 PLACES ±--- / ±---	CHECKED BY KPRASAD DATE 2004/09/24				
APPR: KPRASAD 2004/09/24		3 PLACES ±--- / ±.010	APPROVED BY KPRASAD DATE 2004/09/24	molex MOLEX INCORPORATED			
E		2 PLACES ±0.25 / ±.015	MATERIAL NO. SEE CHART	DOCUMENT NO. SD-42023-****	SHEET NO. 1 OF 2		
REV	DESCRIPTION	1 PLACE ±0.38 / ±---	SIZE A2	THIS DRAWING CONTAINS INFORMATION THAT IS PROPRIETARY TO MOLEX INCORPORATED AND SHOULD NOT BE USED WITHOUT WRITTEN PERMISSION			
		ANGULAR ±1/2°					
		DRAFT WHERE APPLICABLE MUST REMAIN WITHIN DIMENSIONS					

tb_frame_A2_P_ME_T
Rev. D 2004/04/02

ENG. NO.	EDP NO.	FINISH (REF)	CONTACT AREA (REF)	CRIMP AREA (REF)	MATERIAL (REF)	TERMINAL TYPE	WIRE SIZE	INSULATION DIAMETER
X-42023-1A1	PRELIMINARY	SDES-88-P901	----	----	C26000	SOLID	#14-#20 AWG	.060-.130
X-42023-1A1L	PRELIMINARY	SDES-88-P901	----	----	C26000	SOLID	#14-#20 AWG	.060-.130
42023-2A1	002-08-2003	SDES-88-P901	----	----	C26000	SPLIT	#14-#20 AWG	.060-.130
42023-2A1L	002-08-2004	SDES-88-P901	----	----	C26000	SPLIT	#14-#20 AWG	.060-.130
42023-2B1	002-08-2005	SDES-88-P901	----	----	C51000	SPLIT	#14-#20 AWG	.060-.130
42023-2B1L	002-08-2006	SDES-88-P901	----	----	C51000	SPLIT	#14-#20 AWG	.060-.130
42023-2A2	002-08-2007	SEE NOTE 5	.000030 MIN GOLD	.000100 MIN MATTE TIN	C26000	SPLIT	#14-#20 AWG	.060-.130
42023-2A2L	002-08-2008	SEE NOTE 5	.000030 MIN GOLD	.000100 MIN MATTE TIN	C26000	SPLIT	#14-#20 AWG	.060-.130
42023-2B2	002-08-2009	SEE NOTE 5	.000030 MIN GOLD	.000100 MIN MATTE TIN	C51000	SPLIT	#14-#20 AWG	.060-.130
42023-2B2L	002-08-2010	SEE NOTE 5	.000030 MIN GOLD	.000100 MIN MATTE TIN	C51000	SPLIT	#14-#20 AWG	.060-.130

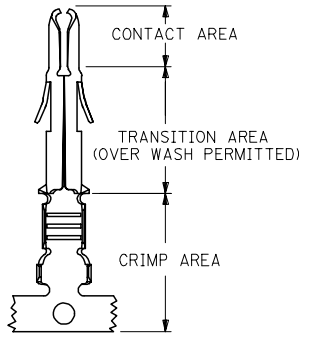

PLATING REGIONS

APPLIES TO GOLD PLATED
TERMINALS ONLY

NOTES:

1) PIN TERMINALS FOR USE WITH THE .084/(2.13) SERIES HOUSINGS:
   PLUG (42021-**)
   CAP (42022-**)
2) PIN TERMINALS MATE WITH SOCKET TERMINALS: .084/(2.13) DIA. SERIES (42024-****).
3) TERMINALS FINISHED IN CHAIN UNLESS SPECIFIED LOOSE. "L" SUFFIX INDICATES LOOSE FORM. (SEE TABLE)
4) MATERIAL: .012/(0.30) THICK STRIP:
   A = BRASS, #C26000, PER SMES-124-C7.
   B = PHOSPHOR BRONZE, #C51000, PER SMES-124-E7.
5) FINISH:
   1 = HOT TIN DIP 20 m.i./(0.51 MICRONS) MINIMUM (PER SDES-88-P901).
   2 = 30 M.I (0.75 MICRONS) MIN GOLD
   & 100 M.I (2.50 MICRONS) MIN SELECT TIN
   50 M.I (1.25 MICRONS) MIN NICKEL OVERALL
6) CRIMP RANGE: SEE CHART.
7) PRODUCT SPECIFICATION PS-42022-0001 APPLIES.

LEGEND:

42023-****
- BASE NUMBER
- TERMINAL: 1 = SOLID PIN, 2 = SPLIT PIN
- MATERIAL CODE (SEE NOTE 4)
- PLATING CODE (SEE NOTE 5)
- FORM: BLANK = CHAIN, "L" = LOOSE

REV	DESCRIPTION	EC NO.	DRWN	CHK'D	APPR.	DATE
E		12005-0302	SUDHIR	KPRASAD	KPRASAD	2004/09/27

QUALITY SYMBOLS: ▼=0, ▽=0

GENERAL TOLERANCES (UNLESS SPECIFIED)

	mm	INCH
4 PLACES	± ---	± ---
3 PLACES	± ---	± ---
2 PLACES	± ---	± ---
1 PLACE	± ---	± ---
ANGULAR ±---°		

DRAFT WHERE APPLICABLE MUST REMAIN WITHIN DIMENSIONS

DIMENSION STYLE: IN/MM
SCALE: ---
DESIGN UNITS: INCH
THIRD ANGLE PROJECTION

		DATE
DRAWN BY	SUDHIR	2004/09/27
CHECKED BY	KPRASAD	2004/09/27
APPROVED BY	KPRASAD	2004/09/27

TITLE: TERMINAL, PIN .084/(2.13) DIA. SERIES

MOLEX INCORPORATED

MATERIAL NO.: SEE CHART
DOCUMENT NO.: SD-42023-****
SHEET NO.: 2 OF 2
SIZE: A2

THIS DRAWING CONTAINS INFORMATION THAT IS PROPRIETARY TO MOLEX INCORPORATED AND SHOULD NOT BE USED WITHOUT WRITTEN PERMISSION