This document was generated on 03/17/2010

PLEASE CHECK WWW.MOLEX.COM FOR LATEST PART INFORMATION

Part Number: 0002081101
Status: Active
Description: Claspcon™ Crimp Terminal Socket, Tin (Sn) Plated Brass Contact, 16-24 AWG, Reel

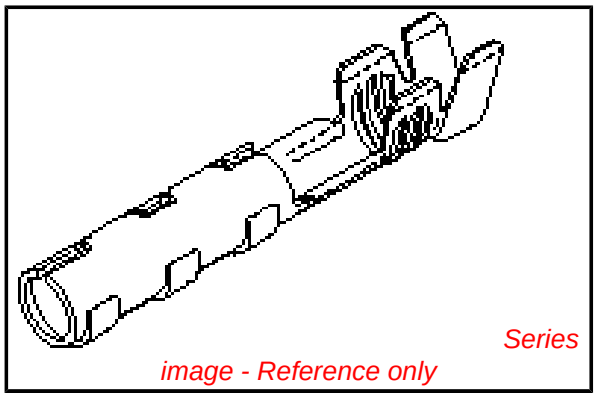

Series image - Reference only

Documents:
Drawing (PDF) | RoHS Certificate of Compliance (PDF)

Agency Certification

CSA	LR19980
UL	E29179

General

Product Family	Crimp Terminals
Series	1881
Crimp Quality Equipment	Yes
Product Name	Claspcon™

Physical

Gender	Female
Material - Metal	Brass
Material - Plating Mating	Tin
Material - Plating Termination	Tin
Packaging Type	Reel
Plating min: Mating (µin)	20
Plating min: Mating (µm)	0.50
Plating min: Termination (µin)	20
Plating min: Termination (µm)	0.50
Termination Interface: Style	Crimp or Compression
Wire Insulation Diameter	3.50mm (.138") max.
Wire Size AWG	16, 18, 20, 22, 24
Wire Size mm²	N/A

Material Info

Old Part Number	1881-2C1A

Reference - Drawing Numbers

Product Specification	RPS-1881-001, RPS-1881-002
Sales Drawing	SD-1881-*

EU RoHS
ELV and RoHS Compliant
REACH SVHC
Contains SVHC: No
Halogen-Free Status
Halogen-Free

China RoHS

Need more information on product environmental compliance?

Email productcompliance@molex.com
For a multiple part number RoHS Certificate of Compliance, click here

Please visit the Contact Us section for any non-product compliance questions.

Search Parts in this Series
1881Series

Mates With
16-06-0005

Application Tooling | **FAQ**

Tooling specifications and manuals are found by selecting the products below. Crimp Height Specifications are then contained in the Application Tooling Specification document.

Global

Description	Product #
Extraction Tool	0011030006
Terminator Die	0011402083
Mini-Mac™ Applicator	0638924200

This document was generated on 03/17/2010

PLEASE CHECK WWW.MOLEX.COM FOR LATEST PART INFORMATION

1881-2*** TERMINAL SHOWN (16-24 AWG)
SEE SHEET 2 FOR 1881-3*** TERMINAL

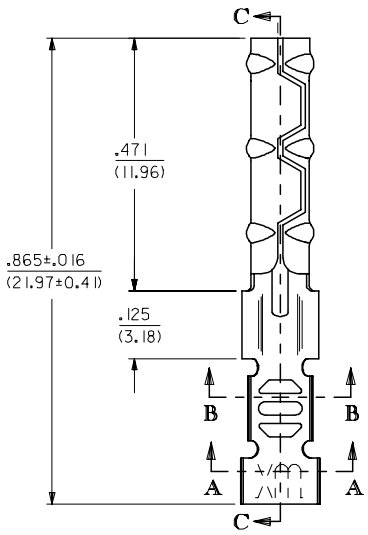

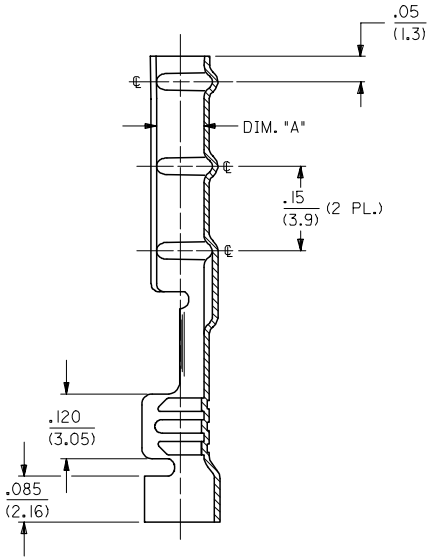

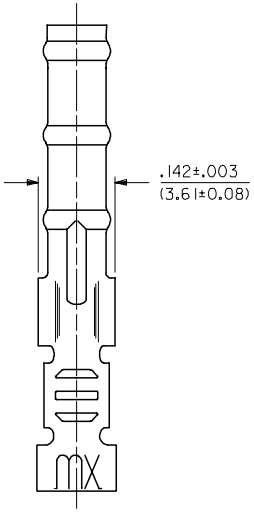

SECTION C-C

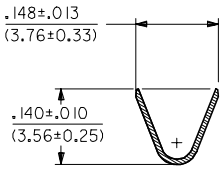

SECTION A-A

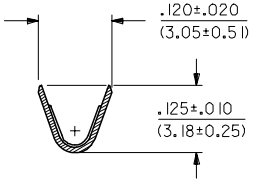

SECTION B-B

UPDATE TITLE BLOCK
EC NO: UCP2006-0215 2005/08/05
DRWN: JLOWE 2005/08/10
CHKD: ADERR 2005/08/10
APPR: FSMITH 2005/08/10
DESCRIPTION
REV
L1

QUALITY SYMBOLS
▼=0
▽=0

GENERAL TOLERANCES (UNLESS SPECIFIED)

	mm	INCH
4 PLACES	± ---	± ---
3 PLACES	± ---	± .010
2 PLACES	± 0.25	± .014
1 PLACE	± 0.36	± ---
ANGULAR ±1/2°		

DRAFT WHERE APPLICABLE MUST REMAIN WITHIN DIMENSIONS

DIMENSION STYLE: IN/MM
SCALE: 6:1
DESIGN UNITS: INCH
THIRD ANGLE PROJECTION

DRAWN BY	GWC	DATE 3/11/91
CHECKED BY	RW	DATE 3/11/91
APPROVED BY	GWF	DATE 3/11/91

TITLE: CRIMP TERMINAL SOCKET, CLASPCON

MOLEX INCORPORATED

MATERIAL NO.: SEE CHART
DOCUMENT NO.: SD-1881-*
SHEET NO.: 1 OF 2
SIZE: C

THIS DRAWING CONTAINS INFORMATION THAT IS PROPRIETARY TO MOLEX INCORPORATED AND SHOULD NOT BE USED WITHOUT WRITTEN PERMISSION

SHT	REV
2	L1
1	L1

tb_frame_C_P_ME_T
Rev. D 2004/04/02

CHART			
PART NUMBER	ENG. NUMBER	DIMENSION "A" (DIA.)	
02-08-1102	1881-2L1A	.085/.090 (2.16/2.29)	
02-08-1101	1881-2C1A		
02-08-1106	1881-2L1B	.083/.088 (2.11/2.24)	OBSOLETE
02-08-1105	1881-2C1B		OBSOLETE
02-08-1104	1881-3L1A	.085/.090 (2.16/2.29)	
02-08-1103	1881-3C1A		
02-08-1107	1881-4C1A	.085/.090 (2.16/2.29)	OBSOLETE
02-08-1108	1881-4L1A		OBSOLETE

1881-3*** TERMINAL SHOWN (24-30 AWG)
SEE SHEET 1 FOR 1881-2*** TERMINAL

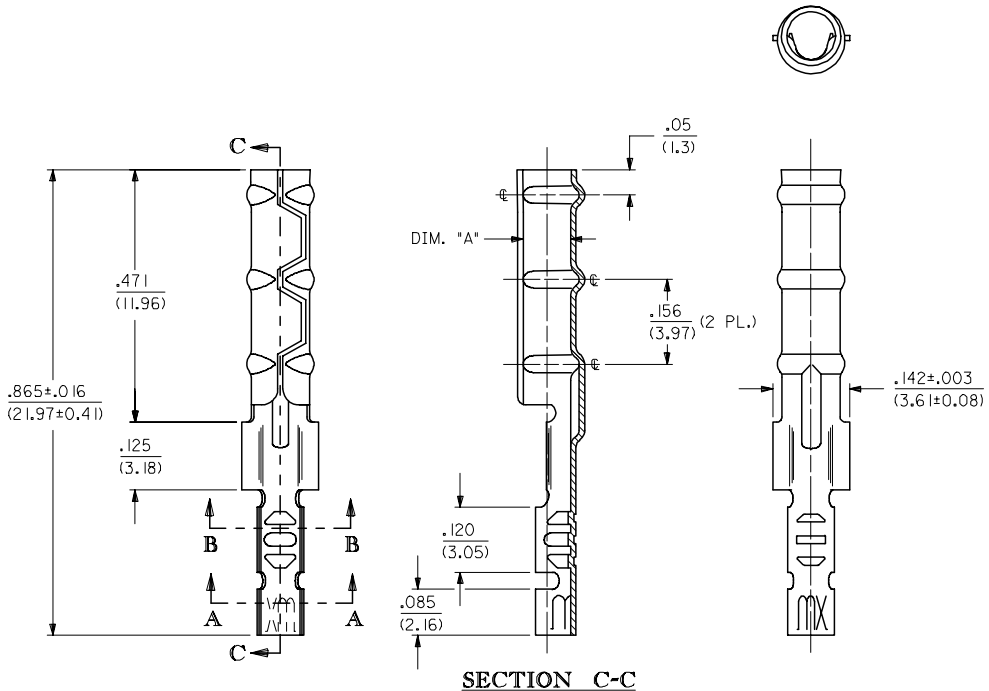

SECTION C-C

LEGEND

1881-****

CRIMP STYLE
2 = 16-24 AWG
3 = 24-30 AWG
4 = 22 AWG

BARREL I.D.
A =.085/.090 BARREL I.D.

FORM
L = LOOSE
C = CHAIN

FINISH
("P" PRECEEDING FINISH NO.
DESIGNATES PREPLATED MATERIAL)
1 = P901 - HOT TIN DIP: .000020/(0.00051) MIN.

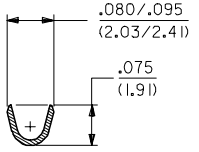

SECTION A-A

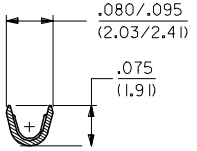

SECTION B-B

NOTES:
1. MATERIAL: CARTRIDGE BRASS
2. FINISH: SEE LEGEND
3. PRODUCT SPECIFICATION: N/A
4. PACKAGING SPECIFICATION: N/A
5. 1881 "CLASPCON" SERIES TERMINAL WITH THE STANDARD BARREL I.D. IS INTENDED FOR MATING TO .093/(2.36) DIA. P.C. BOARD PINS.
6. INITIAL EXTRACTION FORCE TO BE 4.0±1.5 LBS. FROM AN .093/.092 / (2.36/2.34) DIA. PIN AND 2 LBS. MIN. AFTER THE 10TH EXTRATION ON STANDARD BARREL I.D.

OBSOLETE 02-08-1102
EC NO: UCP2006-0215
DRWN: JLOWE 2005/08/05
CH'KD: ADERR 2005/08/10
APPR: FSMITH 2005/08/10
DESCRIPTION
REV
L1

QUALITY SYMBOLS
▼=0
▽=0

GENERAL TOLERANCES (UNLESS SPECIFIED)

	mm	INCH
4 PLACES	± ---	± ---
3 PLACES	± ---	± .010
2 PLACES	± 0.25	± .014
1 PLACE	± 0.36	± ---
ANGULAR ±1/2°		

DRAFT WHERE APPLICABLE MUST REMAIN WITHIN DIMENSIONS

DIMENSION STYLE: IN/MM
SCALE: 6:1
DESIGN UNITS: INCH
THIRD ANGLE PROJECTION

DRAWN BY: GWC	DATE: 3/11/91
CHECKED BY: RW	DATE: 3/11/91
APPROVED BY: GWF	DATE: 3/11/91

TITLE: CRIMP TERMINAL SOCKET, CLASPCON

MOLEX INCORPORATED

MATERIAL NO.: SEE CHART
DOCUMENT NO.: SD-1881-*
SHEET NO.: 2 OF 2
SIZE: C

THIS DRAWING CONTAINS INFORMATION THAT IS PROPRIETARY TO MOLEX INCORPORATED AND SHOULD NOT BE USED WITHOUT WRITTEN PERMISSION

tb_frame_C_P_ME_T
Rev. D 2004/04/02