BELIMO

Average Temperature Sensor

The Pt1000 version is supplied with one continuous sensing element across the whole length of the probe to ensure optimum accuracy and eliminate air stratification problems.
NTC and Ni1000 are industry standard multi-point sensing elements.

Technical data sheet 01MT-5..



5 YEAR WARRANTY

Type Overview

Tyyppi	Output signal	Anturiputken pituus
01MT-5B4	Pt1000	10 ft [3 m]
01MT-5B5	Pt1000	20 ft [6 m]
01MT-5E4	Ni1000 (JCI)	10 ft [3 m]
01MT-5E5	Ni1000 (JCI)	20 ft [6 m]
01MT-5L4	NTC10k (10k2)	10 ft [3 m]
01MT-5L5	NTC10k (10k2)	20 ft [6 m]
01MT-5M4	NTC10k3 (Precon)	10 ft [3 m]
01MT-5M5	NTC10k3 (Precon)	20 ft [6 m]
01MT-5Q4	NTC20k	10 ft [3 m]
01MT-5Q5	NTC20k	20 ft [6 m]

Technical Data

Electrical Data	Electrical connection	Removable spring loaded terminal block max. 2.5 mm²
	Cable entry	Cable gland with strain relief Ø6...8 mm (1/2" NPT conduit adapter included)
Functional Data	Output signal passive temperature	Pt1000 Ni1000 (JCI) NTC10k (10k2) NTC10k3 (Precon) NTC20k
	Application	air
Measuring Data	Measuring values	Temperature
	Measuring range temperature	Pt.., Ni.. : -30...160°F [-35...70°C] NTC.. : -30...120°F [0...50°C]
	Accuracy temperature passive	Passive Sensors depending on used type Pt.. : ±0.5°F @ 32°F [±0.3°C @ 0°C] Ni.. : ±0.7°F @ 32°F [±0.4°C @ 0°C] NTC.. : ±0.35°F @ 77°F [±0.2°C @ 25°C]
	Measuring current	Pt1000: <0.3 mA @ 32°F [0°C] Ni1000 (JCI): <5 mA @ 21°C [70°F] NTC10k2: <2 mA @ 77°F [25°C] NTC10k3: <2.7 mA @ 77°F [25°C] NTC20k: <0.5 mA @ 77°F [25°C]
	Time constant τ (63%) in air duct	typical 100 s @ 0 m/s
Materials	Cable gland	PA6, black

	Housing	cover: lexan, orange base: lexan, orange seal: 0467 NBR70, black UV resistant
Safety Data	Ambient humidity	max. 95% r.H., non-condensing
	Ambient temperature	-30...120°F [-35...50°C]
	Fluid temperature	Pt.., Ni.. : -30...160°F [-35...70°C] NTC.. : 30...120°F [0...50°C]
	Housing surface temperature	max. 195°F [90°C]
	Protection class IEC/EN	III Safety Extra-Low Voltage (SELV)
	Protection class UL	UL Class 2 Supply
	EU Conformity	CE Marking
	Certification IEC/EN	IEC/EN 60730-1
	Certification UL	cULus acc. to UL60730-1A/-2-9, CAN/CSA E60730-1:02/-2-9
	Degree of protection IEC/EN	IP65
	Degree of protection NEMA/UL	NEMA 4X
	Quality Standard	ISO 9001

Safety Notes



This device has been designed for use in stationary heating, ventilation and air-conditioning systems and must not be used outside the specified field of application. Unauthorised modifications are prohibited. The product must not be used in relation with any equipment that in case of a failure may threaten humans, animals or assets.

Ensure all power is disconnected before installing. Do not connect to live/operating equipment.

Only authorised specialists may carry out installation. All applicable legal or institutional installation regulations must be complied during installation.

The device contains electrical and electronic components and must not be disposed of as household refuse. All locally valid regulations and requirements must be observed.

Remarks

General Remarks Concerning Sensors

Due to self-heating with 2 wire passive sensors, the supply wire current affects the measurement accuracy, so it should not exceed 1 mA.

When using lengthy connecting cables (depending on the cross section used), the cable resistance must be taken into account. The lower the impedance of the sensor used, the greater the effect of the line resistance on the measurement, because it generates an offset.

Scope of delivery

Scope of delivery

Description	Type
Mounting kit, with mounting brackets	A-22D-A08
Mounting plate S housing	A-22D-A09
1/2" NPT conduit adapter	

Wiring Diagram

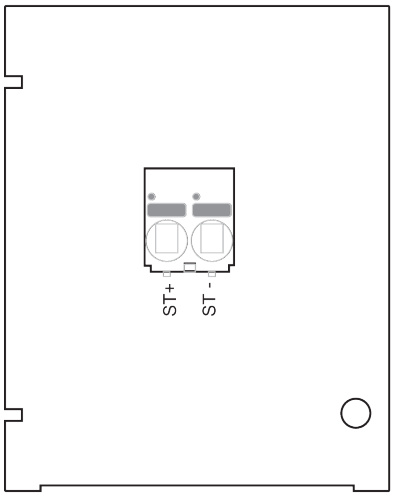

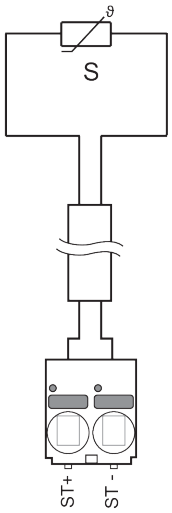

Dimensions

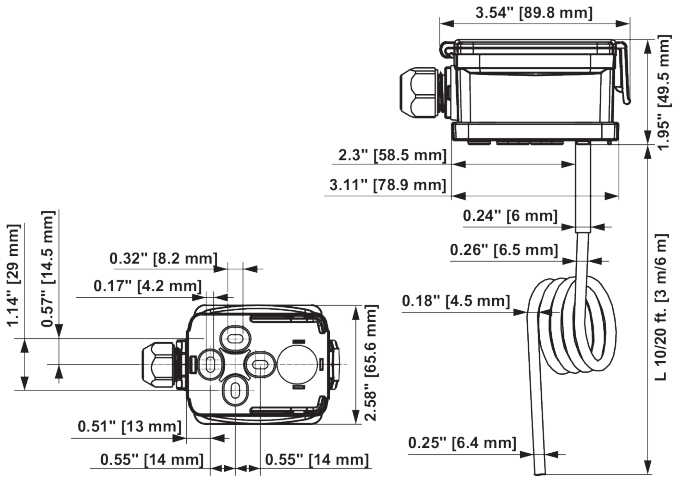

L = Probe length

Tyyppi	Anturiputken pituus	Paino
01MT-5B4	10 ft [3 m]	0.49 lb [0.22 kg]
01MT-5B5	20 ft [6 m]	0.55 lb [0.25 kg]
01MT-5E4	10 ft [3 m]	0.49 lb [0.22 kg]
01MT-5E5	20 ft [6 m]	0.55 lb [0.25 kg]
01MT-5L4	10 ft [3 m]	0.49 lb [0.22 kg]
01MT-5L5	20 ft [6 m]	0.55 lb [0.25 kg]
01MT-5M4	10 ft [3 m]	0.49 lb [0.22 kg]
01MT-5M5	20 ft [6 m]	0.55 lb [0.25 kg]
01MT-5Q4	10 ft [3 m]	0.49 lb [0.22 kg]
01MT-5Q5	20 ft [6 m]	0.55 lb [0.25 kg]