BELIMO

Technical data sheet 01DT-5B..

Duct / Immersion Temperature Sensor

For measuring temperature in duct applications. In connection with a stainless steel or brass thermowell also applicable for pipe applications. NEMA 4X / IP65 rated enclosure.



5 YEAR WARRANTY

Type Overview

Type	Output signal	Probe length	Probe diameter
01DT-5BH	Pt1000	2" [50 mm]	0.24" [6 mm]
01DT-5BL	Pt1000	4" [100 mm]	0.24" [6 mm]
01DT-5BN	Pt1000	6" [150 mm]	0.24" [6 mm]
01DT-5BP	Pt1000	8" [200 mm]	0.24" [6 mm]
01DT-5BR	Pt1000	12" [300 mm]	0.24" [6 mm]
01DT-5BT	Pt1000	18" [450 mm]	0.24" [6 mm]

Technical Data

Electrical Data	Electrical connection	Removable spring loaded terminal block max. 2.5 mm²
	Cable entry	Cable gland with strain relief Ø6...8 mm (1/2" NPT conduit adapter included)
Functional Data	Output signal passive temperature	Pt1000
	Application	air water
Measuring Data	Measuring values	temperature
	Measuring range temperature	-60...320°F [-50...160°C]
	Accuracy temperature passive	±0.5°F @ 32°F [±0.3°C @ 0°C]
	Time constant t (63%) in the air duct	typical 210 s @ 0 m/s typical 46 s @ 3 m/s
	Time constant t (63%) in water pipe	with thermowell A-22P-A.. and thermal contact fluid typical 7 s with thermowell brass typical 9 s with thermowell stainless steel
Materials	Cable gland	plug adapter: PA66, black nut: PA6, black
	Housing	cover: lexan, orange base: lexan, orange seal: 0467 NBR70, black UV resistant

Safety Data		
	Ambient humidity	max. 95% r.H., non-condensing
	Ambient temperature	-30...120°F [-35...50°C]
	Fluid temperature	-60...320°F [-50...160°C]
	Housing surface temperature	max. 195°F [90°C]
	Protection class IEC/EN	III safety extra-low voltage (selv)
	Protection class UL	UL Class 2 Supply
	EU Conformity	CE Marking
	Certification IEC/EN	IEC/EN 60730-1
	Certification UL	cULus acc. to UL60730-1A/-2-9, CAN/CSA E60730-1:02/-2-9
	Degree of protection IEC/EN	IP65
	Quality Standard	ISO 9001

Safety Notes



This device has been designed for use in stationary heating, ventilation and air-conditioning systems and must not be used outside the specified field of application. Unauthorised modifications are prohibited. The product must not be used in relation with any equipment that in case of a failure may threaten humans, animals or assets.
Ensure all power is disconnected before installing. Do not connect to live/operating equipment.

Only authorised specialists may carry out installation. All applicable legal or institutional installation regulations must be complied during installation.

The device contains electrical and electronic components and must not be disposed of as household refuse. All locally valid regulations and requirements must be observed.

Remarks

General Remarks Concerning Sensors

Due to self-heating with 2 wire passive sensors, the supply wire current affects the measurement accuracy, so it should not exceed 1 mA.

When using lengthy connecting cables (depending on the cross section used), the cable resistance must be taken into account. The lower the impedance of the sensor used, the greater the effect of the line resistance on the measurement, because it generates an offset.

Scope of delivery

Scope of delivery	Description	Type
	Mounting clip, with screws and adhesive foil	A-22D-A11
	1/2" NPT conduit adapter	

Accessories

Optional accessories	Description	Type
	Mounting plate S housing	A-22D-A09

Optional accessories air	Description	Type
	Mounting flange for sensor probe 6 mm, up to max. 80°C, Plastic	A-22D-A03
	Mounting flange for sensor probe 6 mm, up to max. 260°C, Brass	A-22D-A05

Recommended accessories water	Description	Type
	Thermowell pocket (fabricated) Stainless steel, 2" [50 mm], 1/2" NPT, wrench size 3/4"	A-22P-A05
	Thermowell pocket (fabricated) Stainless steel, 4" [100 mm], 1/2" NPT, wrench size 3/4"	A-22P-A07
	Thermowell pocket (fabricated) Stainless steel, 6" [150 mm], 1/2" NPT, wrench size 3/4"	A-22P-A09
	Thermowell pocket (fabricated) Stainless steel, 8" [200 mm], 1/2" NPT, wrench size 3/4"	A-22P-A11
	Thermowell pocket (fabricated) Stainless steel, 12" [300 mm], 1/2" NPT, wrench size 3/4"	A-22P-A13
	Thermowell pocket (fabricated) Stainless steel, 18" [450 mm], 1/2" NPT, wrench size 3/4"	A-22P-A15
	Thermowell pocket (machined) Stainless steel, 2" [50 mm], 1/2" NPT, wrench size 3/4"	A-22P-A36
	Thermowell pocket (machined) Stainless steel, 4" [100 mm], 1/2" NPT, wrench size 3/4"	A-22P-A37
	Thermowell pocket (machined) Stainless steel, 6" [150 mm], 1/2" NPT, wrench size 3/4"	A-22P-A38
	Thermowell pocket (machined) Stainless steel, 8" [200 mm], 1/2" NPT, wrench size 3/4"	A-22P-A39
	Thermowell pocket (fabricated) Brass, 2" [50 mm], 1/2" NPT, wrench size 3/4"	A-22P-A17
	Thermowell pocket (fabricated) Brass, 4" [100 mm], 1/2" NPT, wrench size 3/4"	A-22P-A19
	Thermowell pocket (fabricated) Brass, 6" [150 mm], 1/2" NPT, wrench size 3/4"	A-22P-A21
	Thermowell pocket (fabricated) Brass, 8" [200 mm], 1/2" NPT, wrench size 3/4"	A-22P-A23
	Thermowell pocket (fabricated) Brass, 12" [300 mm], 1/2" NPT, wrench size 3/4"	A-22P-A25
	Thermowell pocket (fabricated) Brass, 18" [450 mm], 1/2" NPT, wrench size 3/4"	A-22P-A27
	Syringe with thermal paste	A-22P-A44

Wiring Diagram

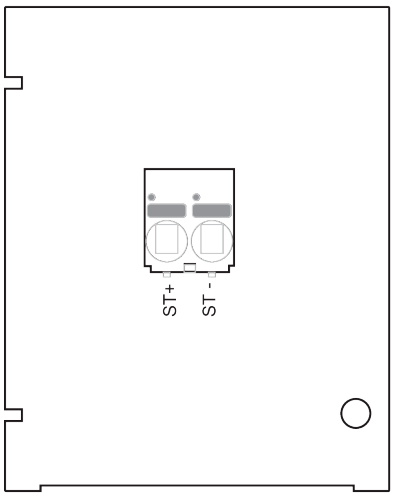

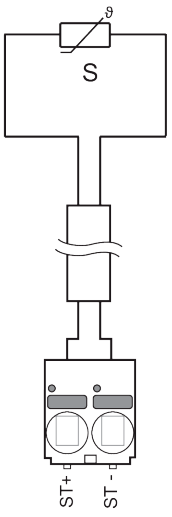

Dimensions

Dimensions

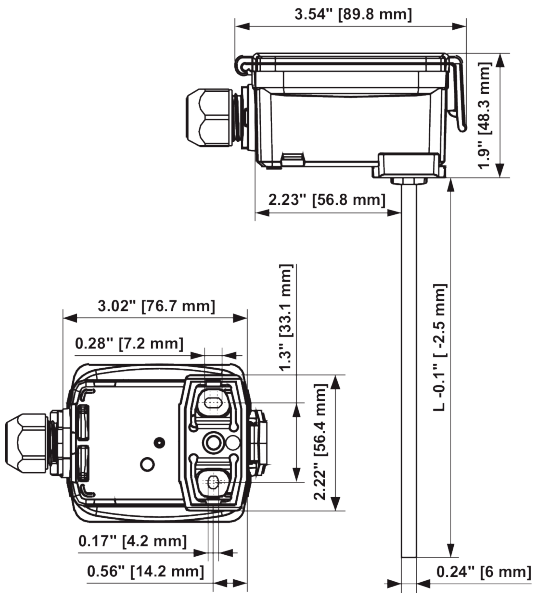

L = Probe length

Type	Probe length	Weight
01DT-5BH	2" [50 mm]	0.26 lb [0.12 kg]
01DT-5BL	4" [100 mm]	0.26 lb [0.12 kg]
01DT-5BN	6" [150 mm]	0.29 lb [0.13 kg]
01DT-5BP	8" [200 mm]	0.29 lb [0.13 kg]
01DT-5BR	12" [300 mm]	0.31 lb [0.14 kg]
01DT-5BT	18" [450 mm]	0.33 lb [0.15 kg]