This document was generated on 03/16/2010

PLEASE CHECK WWW.MOLEX.COM FOR LATEST PART INFORMATION

Part Number: 0192150046
Status: Active
Description: VersaKrimp™ Butt Splice for 2 AWG Wire

Documents:
Drawing (PDF) | RoHS Certificate of Compliance (PDF)

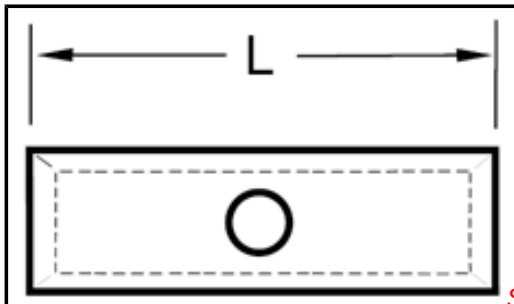

Series
image - Reference only

Agency Certification

CSA	LR18689
UL	E32244

General

Product Family	Splices
Series	19215
Crimp Quality Equipment	Yes
Mil-Spec	N/A
Product Name	Butt, VersaKrimp™

Physical

Barrel Type	Closed - Brazed
Insulation	None
Packaging Type	Bag
Wire Size AWG	2

Material Info

Old Part Number	G-372

Reference - Drawing Numbers

Sales Drawing	CD31003

EU RoHS
ELV and RoHS Compliant
REACH SVHC
Contains SVHC: No
Halogen-Free Status
Not Reviewed

China RoHS

Need more information on product environmental compliance?

Email productcompliance@molex.com
For a multiple part number RoHS Certificate of Compliance, click here

Please visit the Contact Us section for any non-product compliance questions.

Search Parts in this Series
19215Series

Application Tooling | **FAQ**

Tooling specifications and manuals are found by selecting the products below. Crimp Height Specifications are then contained in the Application Tooling Specification document.

Global

Description	Product #
Manual Putt Pump Hydraulic System, Die set required	0192860117
Die Set (large) for the HHLS Hydralic Crimper	0192900010
Hand Crimp Tool	0640013900
Manual tool for Crimping non-insulated 8AWG thru 4/0 Terminals	0192940008
Putt Pump Dieless Head System	0192860065

This document was generated on 03/16/2010

PLEASE CHECK WWW.MOLEX.COM FOR LATEST PART INFORMATION

PART NO.	WIRE SIZE	I.D. MIN.	O.D. MAX.	"L" MAX.	WIRE STOP QTY.
D-354	8	.165	.295	.864	ONE
E-362	6	.230	.374	1.045	ONE
F-364	4	.277	.457	1.155	ONE
G-372	2	.357	.538	1.280	ONE
H-383	1/0	.439	.620	1.440	TWO
J-388	2/0	.496	.697	1.440	TWO
K-393	3/0	.554	.760	1.540	TWO
L-378	4/0	.621	.860	1.540	TWO

(A)

DRWG. NO. CD-31003

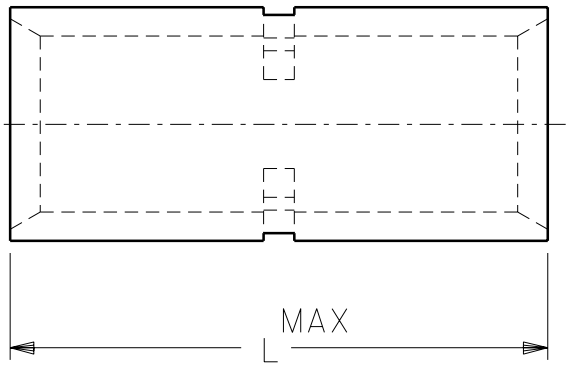

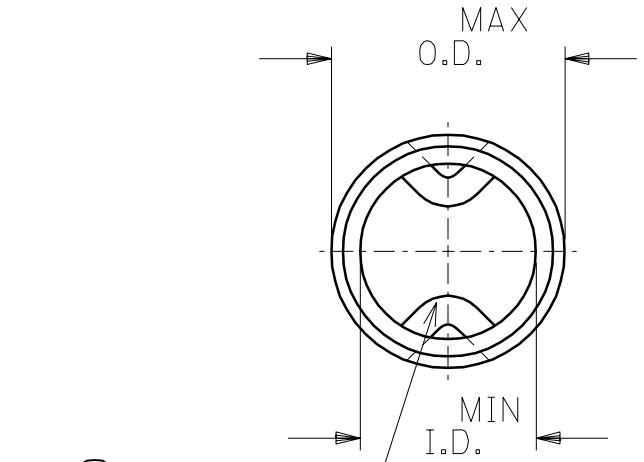

LTR.	REVISIONS
A	ADDED WIRE STOP INFORMATION ETC60355 3/11 RCM

DIMENSIONS SHOWN (METRIC) INCH

UNLESS OTHERWISE SPECIFIED TOLERANCES: ANGULAR ± 1/2°

	INCH	METRIC
3 PLACE	± .005	± ---
2 PLACE	± .01	± 0.13
1 PLACE	± ---	± 0.25

DRAFT WHERE APPLICABLE MUST REMAIN WITHIN DIMENSIONS

REVISE ONLY ON CAD SYSTEM

TITLE

VERSAKRIMP BUTT CONNECTORS

molex ETC INC. PINELLAS PARK, FLA. 33781 U.S.A.

SHEET NO.

DATE 94/03/17

PART NO. SEE CHART

DRWG. NO. CD-31003

DRWG. BY	CHK'D. BY	FILE NAME	DIV.	SIZE
RCM	JM	CD13003 CST		A
APP'D. BY: FP	SCALE: NO:NE			

THIS DRAWING CONTAINS INFORMATION THAT IS PROPRIETARY TO MOLEX-ETC INC. AND SHOULD NOT BE USED WITHOUT WRITTEN PERMISSION.