This document was generated on 03/18/2010

PLEASE CHECK WWW.MOLEX.COM FOR LATEST PART INFORMATION

Part Number: 0190710231

Status: Active

Description: InsulKrimp™ Ring Tongue Terminal for 4 AWG Wire

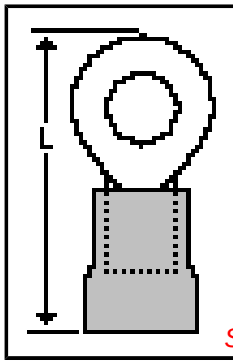

Series image - Reference only

Documents:

Drawing (PDF)

RoHS Certificate of Compliance (PDF)

Product Specification PS-19902-009 (PDF)

General

Product Family	Ring and Spade Terminals
Series	19071
Crimp Quality Equipment	Yes
Mil-Spec	N/A
Product Name	InsulKrimp™
Type	Ring

Physical

Barrel Type	Closed
Color - Resin	Natural
Insulation	PVC
Material - Plating Mating	Tin
Packaging Type	Bag
Stud Size	10 (M5)
Wire Insulation Diameter	13.10mm (.515") max.
Wire Size AWG	4

Material Info

Old Part Number	F-666-10X

Reference - Drawing Numbers

Product Specification	PS-19902-009
Sales Drawing	SD-19071-004

EU RoHS
ELV and RoHS Compliant
REACH SVHC
Not Reviewed
Halogen-Free Status
Not Reviewed

China RoHS

Need more information on product environmental compliance?

Email productcompliance@molex.com
For a multiple part number RoHS Certificate of Compliance, click here

Please visit the Contact Us section for any non-product compliance questions.

Search Parts in this Series
19071Series

Application Tooling | **FAQ**

Tooling specifications and manuals are found by selecting the products below. Crimp Height Specifications are then contained in the Application Tooling Specification document.

Global

Description	Product #
Manual Putt Pump Hydraulic System, Die set required	0192860117
Die Set (large) for the HHLS Hydralic Crimper	0192890007
Hand Crimp Tool	0640013900
Putt Pump Dieless Head System	0192860065

This document was generated on 03/18/2010

PLEASE CHECK WWW.MOLEX.COM FOR LATEST PART INFORMATION

INSULKRIMP X

MATERIAL: Copper
PLATING: Electro-Tin (.0003 Min.)
INSULATION: PVC Color Coded Yellow
STUD SIZES: ("D" ±.005)

10 - .198
14 - .265
56 - .328
38 - .390
76 - .453
12 - .515
58 - .656
34 - .781

ASSEMBLY IS ROHS COMPLIANT.

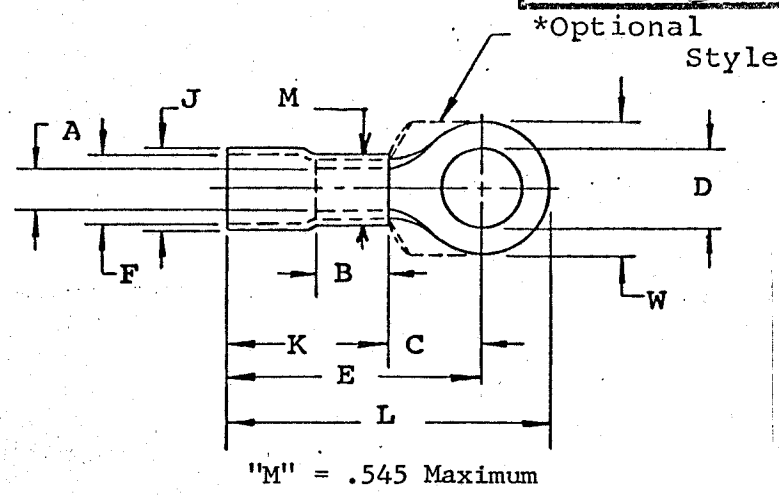

"M" = .545 Maximum

Part Number	"W"	"C" Min.	"E" Max.	"K" Max.	"L" Max.	"A" Min.Avg.	"F" (MWID)	THICKNESS REF	"J" Max.	"B" Min.	Available Stud Size
F-666-X	.678 .652	.520	1.534	.968	1.846	.275	.515	.067	.615	.425	10, 14, 56, 38, 76, 12
F-667-X	.485 .465	.520	1.534	.968	1.756	.275	.515	.067	.615	.425	10, 14, 56
F-669-X	.895 .875	.989	2.003	.968	2.412	.275	.515	.075	.615	.425	14, 56, 38, 76, 12, 58
F-670-X	1.270 1.250	.989	2.003	.968	2.599	.275	.515	.075	.615	.425	14, 56, 38, 76, 12, 58, 34

NOTE: (MWID) denotes maximum wire insulation diameter.

ETC molex INCORPORATED CLEVELAND, OHIO

TITLE: CUSTOMER DRAWING
#4 WIRE RANGE (F)
RING TONGUE TERMINAL

DIMENSIONAL TOLERANCE UNLESS OTHERWISE SPECIFIED

FRAC.	DEC.	ANG.
±	±	±

REVISION		SCALE: ———	DATE
A	ETC2007-0019	DRWN. BY: JTK	1-21-70
		CHKD. BY:	
		APPRD. BY:	
		DRAWING NO.:	