This document was generated on 03/18/2010

PLEASE CHECK WWW.MOLEX.COM FOR LATEST PART INFORMATION

Part Number: 0190710180

Status: Active

Description: InsulKrimp™ Ring Tongue Terminal for 8 AWG Wire

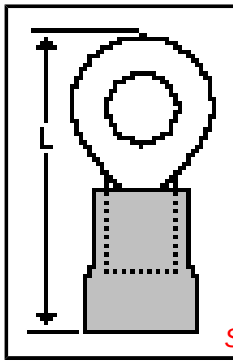

Series image - Reference only

Documents:

Drawing (PDF)

Product Specification PS-19902-009 (PDF)

RoHS Certificate of Compliance (PDF)

General

Product Family	Ring and Spade Terminals
Series	19071
Crimp Quality Equipment	Yes
Mil-Spec	N/A
Product Name	InsulKrimp™
Type	Ring

Physical

Barrel Type	Closed
Color - Resin	Natural
Insulation	PVC
Material - Plating Mating	Tin
Packaging Type	Bag
Stud Size	10 (M5)
Wire Insulation Diameter	6.70mm (.265") max.
Wire Size AWG	8

Material Info

Old Part Number	D-656-10X

Reference - Drawing Numbers

Product Specification	PS-19902-009
Sales Drawing	SD-19071-002

EU RoHS
ELV and RoHS Compliant
REACH SVHC
Not Reviewed
Halogen-Free Status
Not Reviewed

China RoHS

Need more information on product environmental compliance?

Email productcompliance@molex.com
For a multiple part number RoHS Certificate of Compliance, click here

Please visit the Contact Us section for any non-product compliance questions.

Search Parts in this Series
19071Series

Application Tooling | **FAQ**

Tooling specifications and manuals are found by selecting the products below. Crimp Height Specifications are then contained in the Application Tooling Specification document.

Global

Description	Product #
Manual Putt Pump Hydraulic System, Die set required	0192860117
Die Set (large) for the HHLS Hydralic Crimper	0192890001
Hand Crimp Tool	0640013900
Putt Pump Dieless Head System	0192860065

This document was generated on 03/18/2010

PLEASE CHECK WWW.MOLEX.COM FOR LATEST PART INFORMATION

MATERIAL: Copper
PLATING: Electro-Tin (.0003 Min.)
INSULATION: PVC Color Coded Red
STUD SIZES: ("D" ±.005)

06 - .146"	38 - .390"
08 - .173"	76 - .453"
10 - .198"	12 - .515"
14 - .265"	58 - .656"
56 - .328"	34 - .781"

ASSEMBLY IS ROHS COMPLIANT.

INSULKRIMP X

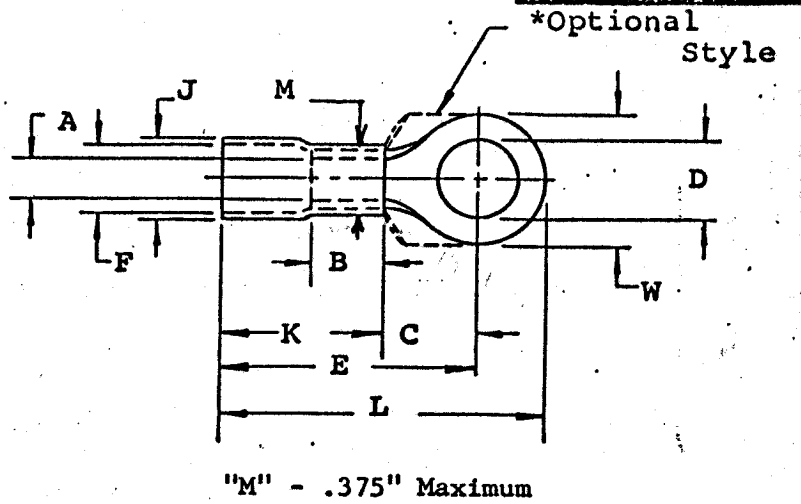

"M" - .375" Maximum

Part Number	"W"	"C" Min.	"E" Max.	"K" Max.	"L" Max.	"A" Min. Avg.	"F" (MWID)	THICKNESS REF	"J" Max.	"B" Min.	Available Stud Size
D-650-X	.478 .458	.363	1.088	.675	1.306	.165	.385	.045	.475	.315	06, 08, 10, 14, 56
D-651-X	.593 .573	.428	1.148	.675	1.427	.165	.385	.045	.475	.315	10, 14, 56, 38, 76
D-652-X	.822 .798	.611	1.336	.675	1.728	.165	.385	.050	.475	.315	10, 14, 56, 38, 76, 12, 58
D-653-X	1.137 1.113	.986	1.715	.675	2.278	.165	.385	.050	.475	.315	14, 56, 38, 76, 12 58, 34
D-656-X	.384 .364	.363	1.088	.675	1.265	.165	.385	.045	.475	.315	06, 08, 10, 14

NOTE: (MWID) denotes maximum wire insulation diameter.

ETC molex INCORPORATED CLEVELAND, OHIO

TITLE: CUSTOMER DRAWING
#8 WIRE RANGE (D)
RING TONGUE TERMINAL

DIMENSIONAL TOLERANCE UNLESS OTHERWISE SPECIFIED

FRAC.	DEC.	ANG.
±	±	±

REVISION		SCALE:	DATE
A	"B" MIN WAS .300 EP 7-20-89	DRWN. BY: JTK	1-21-70
B	ETC2007-0019	CHKD. BY:	
		APPRD. BY:	
		DRAWING NO.:	