This document was generated on 04/13/2010

**PLEASE CHECK WWW.MOLEX.COM FOR LATEST PART INFORMATION**

**Part Number:** 0190380011

**Status:** Active

**Description:** InsulKrimp™ Snap Plug Receptacle for 14-16 AWG Wire, PVC, Fits Male Plug Diameter 4.57mm (.180")

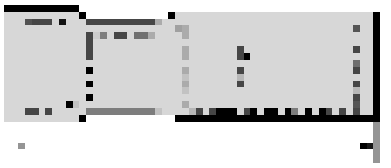

*Series image - Reference only*

**Documents:**

Drawing (PDF)

RoHS Certificate of Compliance (PDF)

## Agency Certification

| | |
|---|---|
| CSA | LR18689 |
| UL | E152602 |

## General

| | |
|---|---|
| Product Family | Quick Disconnects |
| Series | 19038 |
| Comments | Fits Male Plug Dia. 4.57mm (.180") |
| Crimp Quality Equipment | Yes |
| Product Name | InsulKrimp™ |
| Type | Snap Receptacle |

## Physical

| | |
|---|---|
| Barrel Type | Closed |
| Color - Resin | Natural |
| Flammability | 94V-0 |
| Gender | Female |
| Glow-Wire Compliant | No |
| Insulation | PVC |
| Lock to Mating Part | None |
| Material - Metal | Brass |
| Material - Plating Mating | Tin |
| Material - Plating Termination | Tin |
| Material - Resin | PVC |
| Orientation | Straight |
| Packaging Type | Bag |
| Tab Thickness | N/A |
| Tab Width | N/A |
| Termination Interface: Style | Crimp or Compression |
| Wire Insulation Diameter | 3.81mm (.150") max. |
| Wire Size AWG | 14, 16 |
| Wire Size mm² | 1.00 - 2.50 |

## Electrical

| | |
|---|---|
| Voltage - Maximum | 600V |

## Material Info

| | |
|---|---|
| Old Part Number | BRB-2180 |

## Reference - Drawing Numbers

| | |
|---|---|
| Sales Drawing | SD-19038-001 |

**EU RoHS**
**ELV and RoHS Compliant**
**REACH SVHC**
Not Reviewed
**Halogen-Free Status**
**Not Reviewed**

**China RoHS**

**Need more information on product environmental compliance?**

Email productcompliance@molex.com
For a multiple part number RoHS Certificate of Compliance, click here

Please visit the Contact Us section for any non-product compliance questions.

**Search Parts in this Series**
19038Series

**Application Tooling** | **FAQ**

*Tooling specifications and manuals are found by selecting the products below. Crimp Height Specifications are then contained in the Application Tooling Specification document.*

**Global**

| Description | Product # |
|---|---|
| Hand Crimp Tool | 0640012100 |
| Crimp Head for the AT-200™ Pneumatic Hand Tool | 0640052100 |

This document was generated on 04/13/2010

**PLEASE CHECK WWW.MOLEX.COM FOR LATEST PART INFORMATION**

| 10 | 9 | 8 | 7 | 6 | 5 | 4 | 3 | 2 | 19038 |
|---|---|---|---|---|---|---|---|---|---|

| MATERIAL NO. NYLON | ENGINEERING NO. NYLON | INSULATION NYLON COLOR | MATERIAL NO. PVC | ENGINEERING NO. PVC | INSULATION PVC COLOR | WIRE RANGE AWG / $MM^2$ | MWID | FITS MALE PLUG DIA. |
|---|---|---|---|---|---|---|---|---|
| 190380037 | BRA-2156N | LIGHT RED | 190380001 | BRA-2156 | RED | 22-18 / 0.25-1.3 | .128/(3.25) | .156/(3.96) |
| 190380006 | BRA-2180N | LIGHT RED | 190380004 | BRA-2180 | RED | 22-18 / 0.25-1.3 | .128/(3.25) | .180/(4.57) |
| 190380009 | BRB-2156N | LIGHT BLUE | 190380007 | BRB-2156 | DARK BLUE | 16-14 / 1.0-2.6 | .150/(3.81) | .156/(3.96) |
| 190380013 | BRB-2180N | LIGHT BLUE | 190380011 | BRB-2180 | DARK BLUE | 16-14 / 1.0-2.6 | .150/(3.81) | .180/(4.57) |

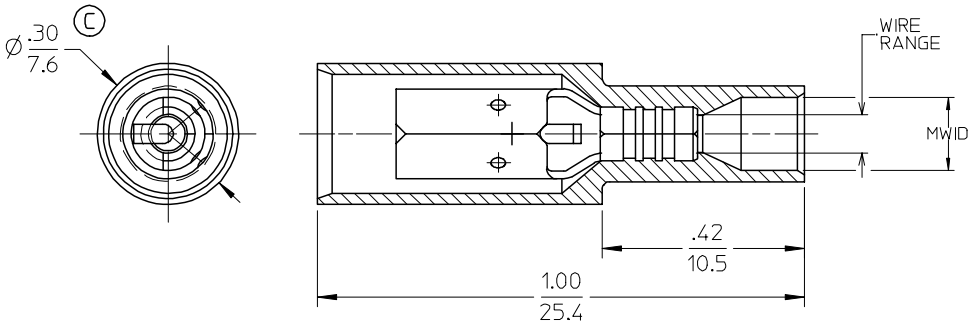


# SALES DRAWING

NOTE(S):

1. RECEPTACLE MATERIAL: .016/(0.41) THK BRASS
2. RECEPTACLE FINISH: TIN PLATING
3. MWID = MAXIMUM WIRE INSULATION DIAMETER
4. (C) ALL COMPONENTS ARE ROHS COMPLIANT.

REVISE DIM.
EC NO: ETC2006-0450
DRWN: CYORK 2006/05/23
CH'KD: JMACNEIL 2006/05/24
APPR: RDEROSS 2006/05/24
DESCRIPTION / REV

QUALITY SYMBOLS
▼ = 0
(C) = 0

| GENERAL TOLERANCES (UNLESS SPECIFIED) | mm | INCH |
|---|---|---|
| 4 PLACES | ± --- | ± --- |
| 3 PLACES | ± --- | ± .005 |
| 2 PLACES | ± 0.13 | ± .01 |
| 1 PLACE | ± 0.25 | ± --- |
| ANGULAR ±1/2° | | |

DRAFT WHERE APPLICABLE
MUST REMAIN WITHIN DIMENSIONS

| SCALE | DESIGN UNITS |
|---|---|
| 5:1 | INCH |

THIRD ANGLE PROJECTION | REVISE ON CAD ONLY

DIMENSION STYLE: IN/MM

| DRAWN BY | DATE |
|---|---|
| DAY | 97/07/07 |
| CHECKED BY | DATE |
| RWD | 97/07/07 |
| APPROVED BY | DATE |
| RWD | 97/07/07 |

TITLE: FULLY INSULATED INSULK FEMALE BULLET RECEPTACLE

molex MOLEX INCORPORATED

| MATERIAL NO. | DOCUMENT NO. | SHEET NO. |
|---|---|---|
| SEE CHART | SD-19038-001 | 1 OF 1 |

THIS DRAWING CONTAINS INFORMATION THAT IS PROPRIETARY TO MOLEX INCORPORATED AND SHOULD NOT BE USED WITHOUT WRITTEN PERMISSION

B

fb_frame_B
rev. B1 2000/08/01

10 9 8 7 6 5 4 3 2 1