This document was generated on 04/13/2010

PLEASE CHECK WWW.MOLEX.COM FOR LATEST PART INFORMATION

Part Number: 0190220010

Status: Active

Description: Krimptite™ Quick Disconnect, Male, for 18-22 (0.80-0.35) Wire, Mylar Tape, Tab 6.35mm (.250") x 0.81mm (.032")

Documents:

Drawing (PDF) | RoHS Certificate of Compliance (PDF)

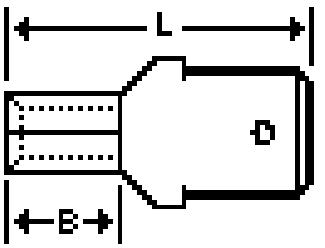

-Series

image - Reference only

Agency Certification

CSA	LR18689
UL	E32244

General

Product Family	Quick Disconnects
Series	19022
Comments	Economical
Crimp Quality Equipment	Yes
Product Name	Krimptite™
Type	Quick Disconnect

Physical

Barrel Type	Closed
Gender	Male
Glow-Wire Compliant	No
Insulation	None
Lock to Mating Part	None
Material - Metal	Copper
Orientation	Straight
Packaging Type	Adhesive Tape on Reel
Polarized to Mating Part	No
Tab Thickness	0.81mm (.032")
Tab Width	6.35mm (.250")
Temperature Range - Operating	Per Wire Specification
Wire Size AWG	18, 20, 22
Wire Size mm²	0.35 - 0.80

Electrical

Voltage - Maximum	Per Wire Specification

Material Info

Old Part Number	AMCT-1T

Reference - Drawing Numbers

Sales Drawing	SD-19022-006

EU RoHS
ELV and RoHS Compliant
REACH SVHC
Not Reviewed
Halogen-Free Status
Not Reviewed

China RoHS

Need more information on product environmental compliance?

Email productcompliance@molex.com
For a multiple part number RoHS Certificate of Compliance, click here

Please visit the Contact Us section for any non-product compliance questions.

Search Parts in this Series
19022Series

Application Tooling | **FAQ**

Tooling specifications and manuals are found by selecting the products below. Crimp Height Specifications are then contained in the Application Tooling Specification document.

Global

Description	Product #
ATP Perishable Tool Kit used in ATP presses that process product on tape	0190270026
Mini-Mac™ Applicator	0638854500

This document was generated on 04/13/2010

PLEASE CHECK WWW.MOLEX.COM FOR LATEST PART INFORMATION

MATERIAL NUMBER	ENGINEERING NUMBER	DESCRIPTION
190220004	AMCT-1	ZINC CHROMATE PLATED
190220010	AMCT-1T	ZINC CHROMATE PLATED, TAPE MOUNTED

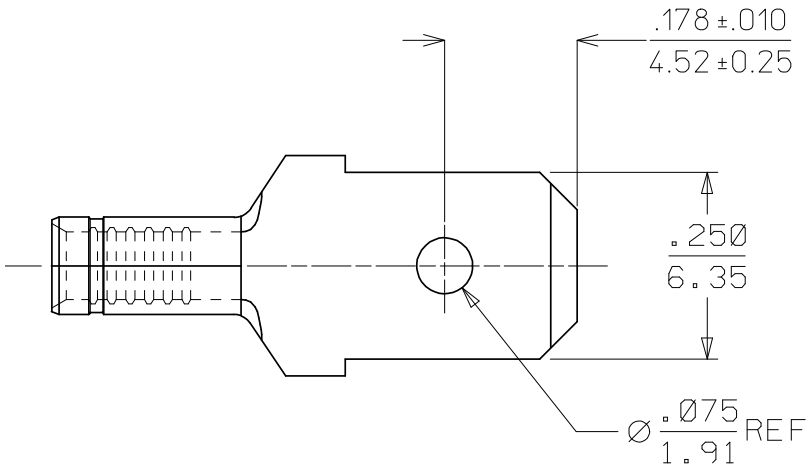

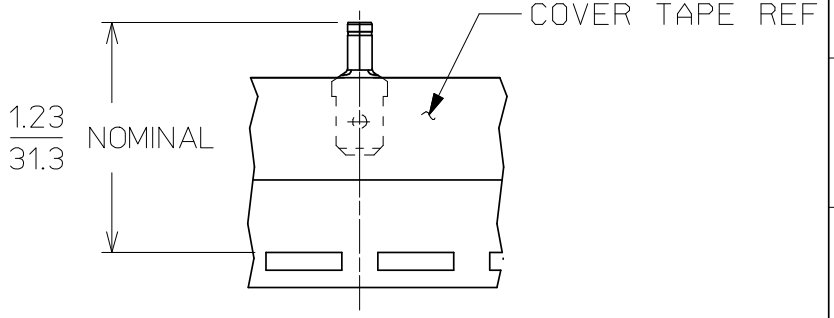

TAPE MOUNTING LOCATION
FOR 190220010, AMCT-1T

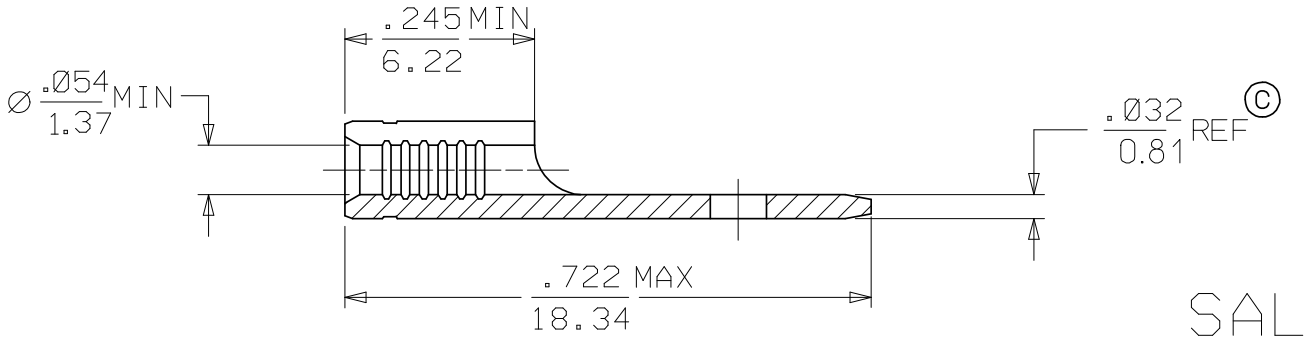

SALES DRAWING

NOTES:
1. MATERIAL: BRASS ©
2. FINISH: SEE CHART
3. WIRE SIZE: 22-18 AWG (0.38 - 0.96 mm²)
4. TAB DIMENSIONS CONFORM TO UL310 SPECIFICATIONS.
5. PART IS ROHS COMPLIANT. ©

CHANGED MATL & FINISH
EC NO: ETC2007-0081 2008/01/28
DRWN: EHILE 2008/01/28
CH'KD: JMACNEIL 2008/02/13
APPR: JMACNEIL
DESCRIPTION
REV C

QUALITY SYMBOLS
▼=0
▽=0

GENERAL TOLERANCES (UNLESS SPECIFIED)

	mm	INCH
4 PLACES	± ---	± ---
3 PLACES	± ---	± .005
2 PLACES	± 0.13	± .01
1 PLACE	± 0.25	± ---
ANGULAR ±1/2°		

DRAFT WHERE APPLICABLE MUST REMAIN WITHIN DIMENSIONS

DIMENSION STYLE: IN/MM
SCALE: 4:1
DESIGN UNITS: INCH
THIRD ANGLE PROJECTION

DRAWN BY	BRE
DATE	1/07/02
CHECKED BY	HEB
DATE	1/07/02
APPROVED BY	RWD
DATE	1/07/02

TITLE: MALE CONNECTOR TERMINAL .250 X .032 TAB KRIMPTITE

molex MOLEX INCORPORATED

MATERIAL NO.: SEE CHART
DOCUMENT NO.: SD-19022-006
SHEET NO.: 1 OF 1
SIZE: C

THIS DRAWING CONTAINS INFORMATION THAT IS PROPRIETARY TO MOLEX INCORPORATED AND SHOULD NOT BE USED WITHOUT WRITTEN PERMISSION