This document was generated on 04/13/2010

PLEASE CHECK WWW.MOLEX.COM FOR LATEST PART INFORMATION

Part Number: 0190020004
Status: Active
Description: Avikrimp™ Fully Insulated Quick Disconnect, Female, for 18-22 AWG Wire, Metal Strip

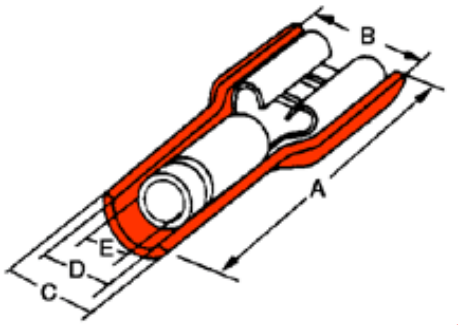

Series
image - Reference only

Documents:
Drawing (PDF)
RoHS Certificate of Compliance (PDF)

Agency Certification

CSA	LR18689
TUV	R72090224
UL	E79133

General

Product Family	Quick Disconnects
Series	19002
Crimp Quality Equipment	Yes
Product Name	Avikrimp™
Type	Quick Disconnect

Physical

Barrel Type	Closed
Flammability	94V-2
Gender	Female
Glow-Wire Compliant	No
Insulation	Nylon (PA)
Lock to Mating Part	None
Material - Metal	Brass
Orientation	Straight
Packaging Type	Reel
Polarized to Mating Part	No
Tab Thickness	0.81mm (.032")
Tab Width	6.35mm (.250")
Temperature Range - Operating	-65°C to +105°C
Wire Insulation Diameter	3.17mm (.125") max.
Wire Size AWG	18, 20, 22
Wire Size mm²	0.35 - 0.80

Electrical

Voltage - Maximum	300V

Material Info

Old Part Number	AA-5261Z

Reference - Drawing Numbers

Sales Drawing	SD-19002-003

EU RoHS
ELV and RoHS Compliant
REACH SVHC
Not Reviewed
Halogen-Free Status
Not Reviewed

China RoHS

Need more information on product environmental compliance?

Email productcompliance@molex.com
For a multiple part number RoHS Certificate of Compliance, click here

Please visit the Contact Us section for any non-product compliance questions.

Search Parts in this Series
19002Series

Use With
19001-0001 , 19001-0002

Application Tooling | **FAQ**
Tooling specifications and manuals are found by selecting the products below. Crimp Height Specifications are then contained in the Application Tooling Specification document.
Global

Description	Product #
ASP Tool Kit, Crimp Dies for the ASP-202 Air Crimping Press for Metal Strip Terminals	0192870022
Mini-Mac™ Applicator	0638812000

This document was generated on 04/13/2010

PLEASE CHECK WWW.MOLEX.COM FOR LATEST PART INFORMATION

MATERIAL NUMBER LOOSE PCS	ENGINEERING NUMBER LOOSE PCS	MATERIAL NUMBER ON STRIP	ENGINEERING NUMBER ON STRIP	MATERIAL NUMBER ON TAPE	ENGINEERING NUMBER ON TAPE	MATERIAL NUMBER REV WOUND ON TAPE	ENGINEERING NUMBER REV WOUND ON TAPE	MATERIAL NUMBER ON TAPE BIG REEL	ENGINEERING NUMBER ON TAPE BIG REEL	ACCEPTS TAB SIZE	STOCK THK	"A" MAX	"B" MAX	"F" REF	"G" MAX	"H" REF
190020001	AA-5261	190020004	AA-5261Z	190020002	AA-5261T	190020003	AA-5261TR	190020047	AA-5261BT	.250 X .032	.016/0.41	.89/22.6	.38/9.7	.16/4.1	.20/5.1	1.425/36.20
190020019	AA-5283	190020059	AA-5283Z	190020020	AA-5283T	190020058	AA-5283TR			.205 X .020	.016/0.41	.80/20.3	.32/8.1	.16/4.1	.22/5.6	1.395/35.43
190020021	AA-5285	190020023	AA-5285Z	190020022	AA-5285T	190020060	AA-5285TR			.205 X .032	.016/0.41	.80/20.3	.32/8.1	.16/4.1	.22/5.6	1.395/35.43
190020005	AA-5267	190020008	AA-5267Z	190020007	AA-5267T			190020006	AA-5267BT	.187 X .020	.016/0.41	.80/20.3	.32/8.1	.16/4.1	.22/5.6	1.380/35.10
190020009	AA-5271	190020012	AA-5271Z	190020010	AA-5271T	190020011	AA-5271TR			.187 X .032	.016/0.41	.80/20.3	.32/8.1	.16/4.1	.22/5.6	1.380/35.10
190020013	AA-5275	190020015	AA-5275Z	190020014	AA-5275T					.110 X .020	.012/0.31	.80/20.3	.23/5.8	.13/3.3	.20/5.1	1.380/35.05
190020016	AA-5279	190020018	AA-5279Z	190020017	AA-5279T	190020065	AA-5279TR			.110 X .032	.012/0.31	.80/20.3	.23/5.8	.13/3.3	.20/5.1	1.380/35.05

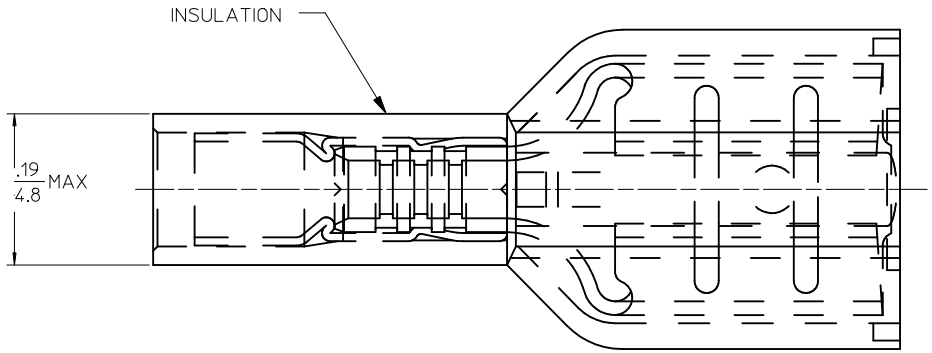

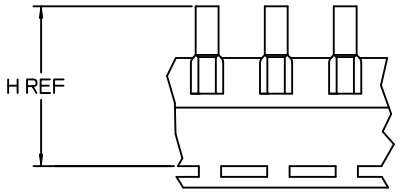

PARTS ON TAPE

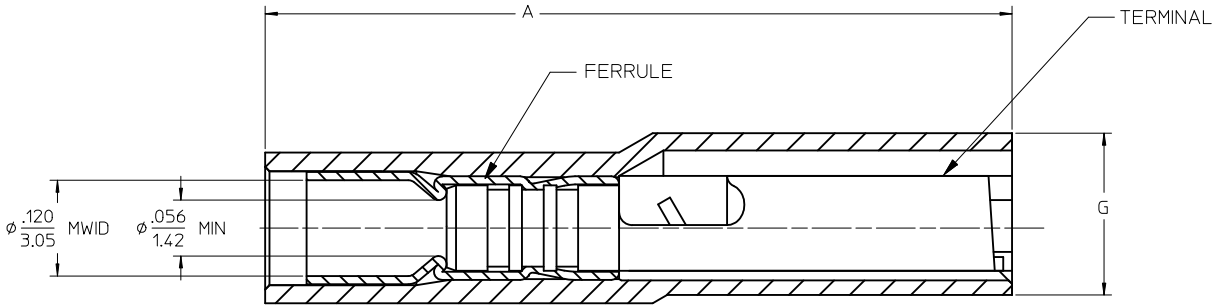

TERMINAL IS NOT SECTIONED FOR CLARITY

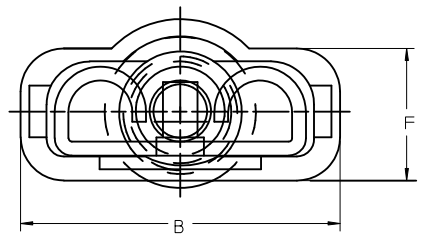

SALES DRAWING

NOTES:

1. MATERIAL: TERMINAL BRASS
   TERMINAL PLATING: ELECTRO TIN
   Ⓓ FERRULE: COPPER ALLOY
   FERRULE PLATING: ELECTRO TIN
   INSULATION: NYLON 94V2 COLOR RED.
2. MWID = MAXIMUM WIRE INSULATION DIAMETER
Ⓓ 3. PARTS ARE ROHS COMPLIANT.

FERRULE MAT'L DESCR
EC NO: WNA2009-0510
DRWN:ETHRODAHL 2010/01/04
CHKD:JMACNEIL 2010/01/05
APPR:JMACNEIL 2010/01/05
DESCRIPTION
D
REV

QUALITY SYMBOLS
▼=0
▽(C)=0

GENERAL TOLERANCES (UNLESS SPECIFIED)

	mm	INCH
4 PLACES	± ---	± ---
3 PLACES	± ---	± .005
2 PLACES	± 0.13	± .01
1 PLACE	± 0.25	± ---
ANGULAR ±---°		

DRAFT WHERE APPLICABLE MUST REMAIN WITHIN DIMENSIONS

DIMENSION STYLE: IN/MM
SCALE: ---
DESIGN UNITS: INCH
THIRD ANGLE PROJECTION

DRAWN BY: BENDERLE DATE: 2005/03/28
CHECKED BY: R DEROSS DATE: 2005/03/28
APPROVED BY: R DEROSS DATE: 2005/03/28

TITLE: AVIKRIMP FEMALE FIQD 22-18 AWG

molex MOLEX INCORPORATED

MATERIAL NO.: SEE CHART
DOCUMENT NO.: SD-19002-003
SHEET NO.: 1 OF 1
SIZE: C

THIS DRAWING CONTAINS INFORMATION THAT IS PROPRIETARY TO MOLEX INCORPORATED AND SHOULD NOT BE USED WITHOUT WRITTEN PERMISSION