IEC Appliance Inlet C16, Screw-on Mounting, Front Side, Quick-connect or Screw-on Terminal



C16

120° C

Description

- Panel Mount:
  Screw-on mounting, Frontside
- Appliance Inlet, Pin temperature 120 °C, Protection class I

Approvals

- VDE License Number: 40009508
- UL License Number: E96454
- CSA License Number: 27324

References

General Product Information

Weblinks

Approvals, RoHS, CHINA-RoHS, Mating Connectors, Distributor-Stock-Check, Accessories

Technical Data

Ratings IEC	10 A / 250 VAC; 50 Hz
Ratings UL/CSA	15 A / 250 VAC; 60 Hz
Dielectric Strength	> 3 kVAC between L-N > 1.5 kVAC between L/N-PE (1 min/50 Hz)
Allowable Operation Temp.	-25 °C to 120 °C
Degree of Protection	from front side IP 20 acc. to IEC 60529
Protection Class	Suitable for appliances with protection class 1 acc. to IEC 61140
Material: Housing	black or grey, UL 94V-0

Appliance Inlet	C16 acc. to IEC/EN 60320-1 UL 498, CSA C22.2 no. 42 (For hot conditions) pin-temperature 120 °C, 10 A, Protection Class 1

Dimensions

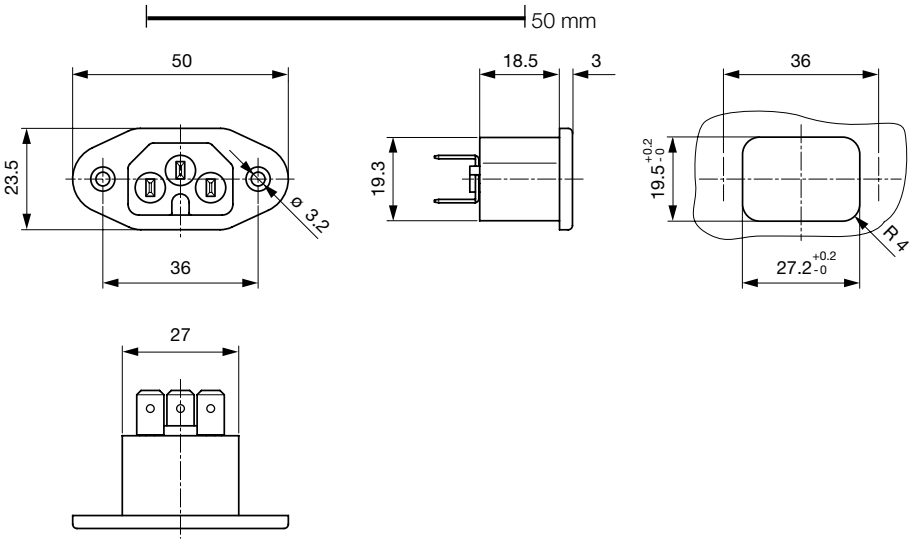

Lenght of the terminal please find at the order code configuration table

Config. Code

Product Configurator

0161 - H - A B C 0- D - E G

The characters are placeholders for the correspondingly keys of selections from the key tables.

0161 - **H** - A B C 0- D - E G = Type

Type	Configuration key
protection class 1	X

0161 - H - **A** B C 0- D - E G = Terminals

Terminal L		Configuration key
short solder terminal (L=4,8mm)		2
blade terminal (4,8x0,8mm)		8
blade terminal (6,3x0,8mm)		9
screw terminal		A

0161 - H - A **B** C 0- D - E G = Terminals

Terminal N	Configuration key
short solder terminal (L=4,8mm)	2
blade terminal (4,8x0,8mm)	8
blade terminal (6,3x0,8mm)	9
screw terminal	A

Symbols similar as in table A

0161 - H - A B **C** 0- D - E G = Terminals

Terminal Ground	Configuration key
short solder terminal (L=4,8mm)	2
blade terminal (4,8x0,8mm)	8
blade terminal (6,3x0,8mm)	9
screw terminal	A

Symbols similar as in table A

0161 - H - A B C 0- **D** - E G = Color

Color	Configuration key
jet black; RAL9005	A

standard color: black

0161 - H - A B C 0- D - **E** G = Style

Style	Configuration key
flange with countersunk holes	1
flange with through holes	2

0161 - H - A B C 0- D - E **G** = Dimension X

Dimension "X"	Configuration key
36	
40	

The dimension "X" is dispalyed in ($^{1}/_{10}$ mm). This information is also valid for the order code

Variants

Config. Code	Description	Order Number
0161-X-8880-A-136	0161, IEC Appliance Inlet C16, 120°C, version: 1, L: blade terminal (4,8x0,8mm), N: blade terminal (4,8x0,8mm), ground: blade terminal (4,8x0,8mm), color: jet black; RAL9005, design: flange with countersunk holes, dimension X: 36	0161 (1207752714813)
0161-X-9990-A-136	0161, IEC Appliance Inlet C16, 120°C, version: 1, L: blade terminal (6,3x0,8mm), N: blade terminal (6,3x0,8mm), ground: blade terminal (6,3x0,8mm), color: jet black; RAL9005, design: flange with countersunk holes, dimension X: 36	0161 (1207752795779)

The listet variants should be available from stock Other versions on request www.schurter.com/contact

Packaging unit 50 Pcs

Mating Outlets/Connectors



Category / Description	
Connector Overview complete	
IEC Connector C15, Rewireable, Straight	0101
IEC Connector C15A, Rewireable, Straight	0102
IEC Connector C15A, Rewireable, Straight	0102-G
IEC Connector C15A, Rewireable, Angled	0112
IEC Connector C15, Rewireable, Straight	4781
Connector further types to 0161	...



Power Cord Overview complete

Power Cord with IEC Connector C15, Straight, 120°C	3366
Power Cord with IEC Connector C15, Angled, 120°C	3368

Power Cord further types to 0161

The specifications, descriptions and illustrations indicated in this document are based on current information. All content is subject to modifications and amendments.