This document was generated on 05/18/2010

# PLEASE CHECK WWW.MOLEX.COM FOR LATEST PART INFORMATION

**Part Number:** 0015474114
**Status:** Active
**Overview:** cgrid__sl_products
**Description:** 2.54mm (.100") C-Grid SL™ Single Row, Female, Version A Receptacle, 11 Circuits

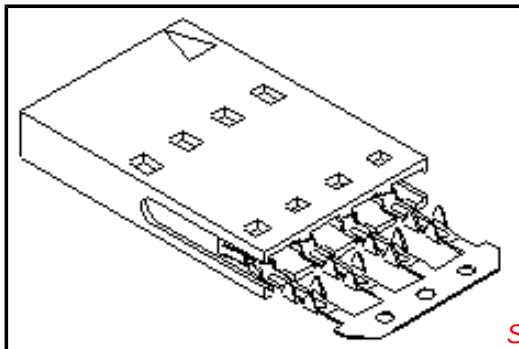

*Series image - Reference only*

**Documents:**

3D Model
Drawing (PDF)
Product Specification PS-70430 (PDF)
RoHS Certificate of Compliance (PDF)

## Agency Certification

| | |
|---|---|
| CSA | LR19880 |
| UL | E29179 |

## General

| | |
|---|---|
| Product Family | FFC/FPC Connectors |
| Series | 70430 |
| Overview | cgrid__sl_products |
| Product Name | SL™ |

## Physical

| | |
|---|---|
| Circuits (Loaded) | 11 |
| Color - Resin | Black |
| Contact Position | N/A |
| Durability (mating cycles max) | 50 |
| Entry Angle | Vertical |
| Flammability | 94V-0 |
| Material - Metal | Phosphor Bronze |
| Material - Plating Mating | Gold |
| Material - Plating Termination | Tin |
| Material - Resin | Polyester Alloy |
| Number of Rows | 1 |
| Orientation | Vertical |
| PC Tail Length (in) | 0.130 In |
| PC Tail Length (mm) | 3.30 mm |
| PCB Retention | None |
| PCB Thickness Recommended (in) | 0.062 In, 0.093 In |
| PCB Thickness Recommended (mm) | 1.60 mm, 2.40 mm |
| Packaging Type | Tube |
| Pitch - Mating Interface (in) | 0.100 In |
| Pitch - Mating Interface (mm) | 2.54 mm |
| Plating min: Mating (µin) | 30 |
| Plating min: Mating (µm) | 0.75 |
| Plating min: Termination (µin) | 75 |
| Plating min: Termination (µm) | 1.875 |
| Polarized to PCB | No |
| Stackable | Yes |
| Temperature Range - Operating | -40°C to +105°C |
| Termination Interface: Style | IDT or Pierce |
| Wire/Cable Type | FFC/FPC |

## Electrical

| | |
|---|---|
| Current - Maximum per Contact | 1A, 2A |
| Voltage - Maximum | 250V |

## Material Info

| | |
|---|---|
| Old Part Number | 70430-0360 |

**EU RoHS**
**ELV and RoHS Compliant**
**REACH SVHC**
**Not Reviewed**
**Halogen-Free Status**
**Not Reviewed**

**China RoHS**

**Need more information on product environmental compliance?**

Email productcompliance@molex.com
For a multiple part number RoHS Certificate of Compliance, click here

Please visit the Contact Us section for any non-product compliance questions.

**Search Parts in this Series**
70430Series

**Mates With**
2.54mm (.100") pitch, single or dual row,breakaway headers

**Application Tooling** | **FAQ**

*Tooling specifications and manuals are found by selecting the products below. Crimp Height Specifications are then contained in the Application Tooling Specification document.*

**Global**

| Description | Product # |
|---|---|
| Manual Ribbon Cable Cutter Hand Tool | 0638170100 |
| Tool Kit for Standard Manual Press FFC | 0622007400 |
| Standard Manual Press for FFC | 0622007800 |
| TM-42™ FFC and SL™ Termination Kit | 0622018700 |

**Reference - Drawing Numbers**

| | | | |
|---|---|---|---|
| Product Specification | PS-70430 | TM-42™ FFC and SL™ Press and Termination Kit for 110v applications | 0622020800 |
| Sales Drawing | SDA-70430-0351-0374 | | |

This document was generated on 05/18/2010

**PLEASE CHECK WWW.MOLEX.COM FOR LATEST PART INFORMATION**

"A" - OPTION

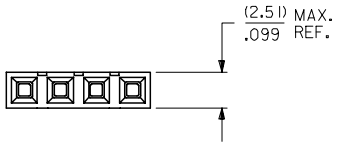


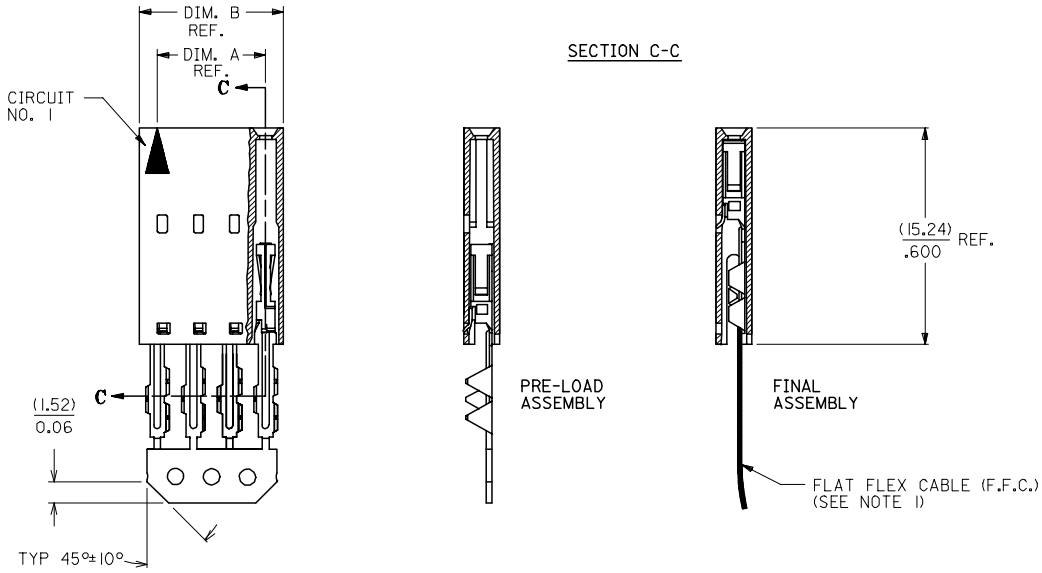


NOTES:

1) PRE LOADED ASSEMBLY TO BE USED WITH (0.30)/.012 MAX. THICK FLAT FLEX CABLE WITH (1.57)/.062 WIDE COPPER CONDUCTORS ON (2.54)/.100 CENTERS OR, (0.13)/.005 - (0.28)/.011 THICK MYLAR WITH (1.02)/.040 - (1.65)/.065 WIDE SILVER INK CONDUCTORS ON (2.54)/.100 CENTERS.
2) STANDARD PACKING PER PK70873-0001 SHALL BE USED.
3) SEE CHART FOR CIRCUIT SIZES, "A" AND "B" DIMENSIONS.
4) TWO (2) CIRCUIT ASSEMBLIES SUPPLIED AS GROUPED PAIRS.
5) PART MATES WITH (0.64)/.025 SQ. PINS, (8.13)/.320 TO (5.08)/.200 LONG ON (2.54)/.100 CENTERS.
6) REFER TO SDA-70430-**** (SHEET 3) FOR MINOR VARIATIONS TO "G" OPTION HOUSINGS.
7) PARTS CONFORM TO CLASS B OF COSMETIC SPECIFICATION PS-45499-002.

| CKT. SIZE | EDP. NO. | ENG. NO. | A | B |
|---|---|---|---|---|
| 2 | 015-47-4024 | 70430-0351 | (2.54) .100 | (5.05) .199 |
| 3 | 015-47-4034 | 70430-0352 | (5.08) .200 | (7.59) .299 |
| 4 | 015-47-4044 | 70430-0353 | (7.62) .300 | (10.13) .399 |
| 5 | 015-47-4054 | 70430-0354 | (10.16) .400 | (12.67) .499 |
| 6 | 015-47-4064 | 70430-0355 | (12.70) .500 | (15.21) .599 |
| 7 | 015-47-4074 | 70430-0356 | (15.24) .600 | (17.75) .699 |
| 8 | 015-47-4084 | 70430-0357 | (17.78) .700 | (20.29) .799 |
| 9 | 015-47-4094 | 70430-0358 | (20.32) .800 | (22.83) .899 |
| 10 | 015-47-4104 | 70430-0359 | (22.86) .900 | (25.37) .999 |
| 11 | 015-47-4114 | 70430-0360 | (25.40) 1.000 | (27.91) 1.099 |
| 12 | 015-47-4124 | 70430-0361 | (27.94) 1.100 | (30.45) 1.199 |
| 13 | 015-47-4134 | 70430-0362 | (30.48) 1.200 | (32.99) 1.299 |
| 14 | 015-47-4144 | 70430-0363 | (33.02) 1.300 | (35.53) 1.399 |
| 15 | 015-47-4154 | 70430-0364 | (35.56) 1.400 | (38.07) 1.499 |
| 16 | 015-47-4164 | 70430-0365 | (38.10) 1.500 | (40.61) 1.599 |
| 17 | 015-47-4174 | 70430-0366 | (40.64) 1.600 | (43.15) 1.699 |
| 18 | 015-47-4184 | 70430-0367 | (43.18) 1.700 | (45.69) 1.799 |
| 19 | 015-47-4194 | 70430-0368 | (45.72) 1.800 | (48.23) 1.899 |
| 20 | 015-47-4204 | 70430-0369 | (48.26) 1.900 | (50.77) 1.999 |
| 21 | 015-47-4214 | 70430-0370 | (50.80) 2.000 | (53.31) 2.099 |
| 22 | 015-47-4224 | 70430-0371 | (53.34) 2.100 | (55.85) 2.199 |
| 23 | 015-47-4234 | 70430-0372 | (55.88) 2.200 | (58.39) 2.299 |
| 24 | 015-47-4244 | 70430-0373 | (58.42) 2.300 | (60.93) 2.399 |
| 25 | 015-47-4254 | 70430-0374 | (60.96) 2.400 | (63.47) 2.499 |

HOUSING MATERIAL: GLASS FILLED POLYSTER, UL 94V-0.
TERMINAL MATERIAL: PHOSPHOR BRONZE.
PLATING: 30 GOLD - .000030 MINIMUM GOLD PLATE IN SELECT AREA,
.000075 MINIMUM TIN PLATE IN SELECT AREA,
.000050 MINIMUM NICKEL PLATE OVER-ALL.

| CONTACT PLATING | COLOR CODE |
|---|---|
| TIN | NONE |
| 15 GOLD | YELLOW |
| 30 GOLD | RED |

ADD TOLERANCE
EC NO: UCP2007-2849 2007/05/18
DRWN:DMORGAN 2007/05/21
CH'KD:MS BARRA
APPR:SMILLER
DESCRIPTION
REV D

QUALITY SYMBOLS
▼=0
▽=0

GENERAL TOLERANCES (UNLESS SPECIFIED)

| | mm | INCH |
|---|---|---|
| 4 PLACES | ± --- | ± --- |
| 3 PLACES | ± --- | ± .010 |
| 2 PLACES | ± 0.25 | ± .015 |
| 1 PLACE | ± 0.38 | ± --- |
| ANGULAR ±1/2° | | |

DRAFT WHERE APPLICABLE MUST REMAIN WITHIN DIMENSIONS

DIMENSION STYLE: MM/IN
SCALE: 4:1
DESIGN UNITS: INCH
THIRD ANGLE PROJECTION

| | |
|---|---|
| DRAWN BY | RAS |
| DATE | 1986/07/21 |
| CHECKED BY | MJM |
| DATE | 1986/07/21 |
| APPROVED BY | WAZ |
| DATE | 1986/07/21 |

TITLE: ASSEMBLY, CONNECTOR FFC FEMALE SINGLE ROW (2.54)/.100

MOLEX INCORPORATED

MATERIAL NO.: SEE TABLE
DOCUMENT NO.: SDA-70430-0351-0374
SHEET NO.: 1 OF 1
SIZE C

THIS DRAWING CONTAINS INFORMATION THAT IS PROPRIETARY TO MOLEX INCORPORATED AND SHOULD NOT BE USED WITHOUT WRITTEN PERMISSION