7190 Series Work Station Parts

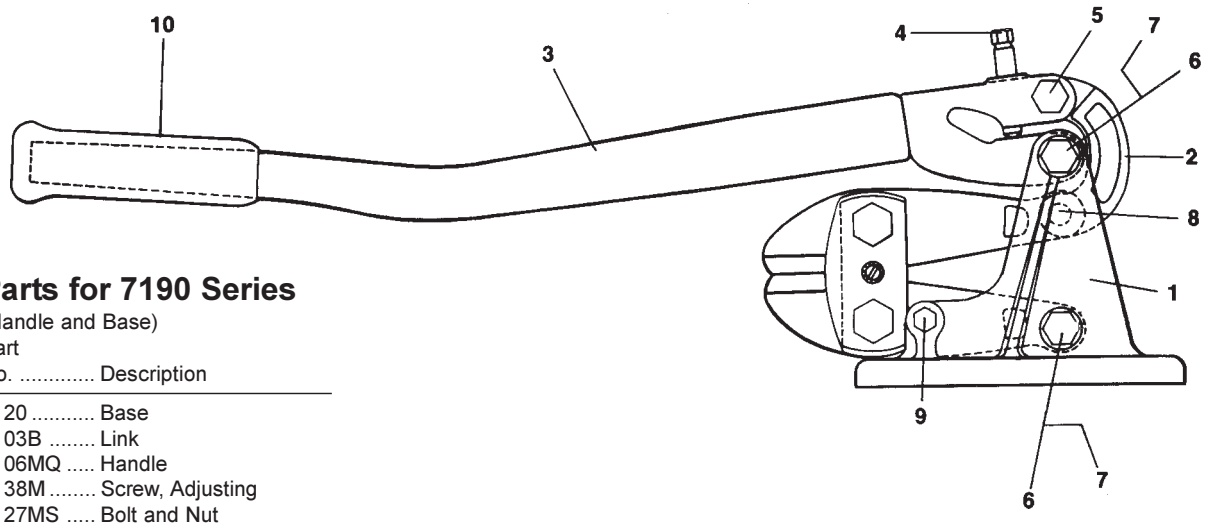

Parts for 7190 Series

(Handle and Base)

Item No.	Part No.	Description
1	7120	Base
2	0103B	Link
3	7106MQ	Handle
4	0138M	Screw, Adjusting
5	0127MS	Bolt and Nut
6	0127SJ	Bolt, Bracket
7	0693C	Nut, Bracket
8	0114B	Pin, Connecting
9	0138KB	Screw, Locking
10	0180M	Grip, Rubber

Cutterhead Parts For 7190C

Parts for 7190C

Item No.	Part No.	Description
.....	0113C	Cutterhead
.....	0112C	Jaws, Pair
.....	0124	Cutterhead less Jaws
1	0110C	Jaw, Right
2	0111C	Jaw, Left
3	0121	Strap, Bottom
4	0120	Strap, Top
5	0156	Lockplate
6	0136	Bolt, Left Thread
7	0135	Bolt, Right Thread
8	0257	Screw, Lockplate

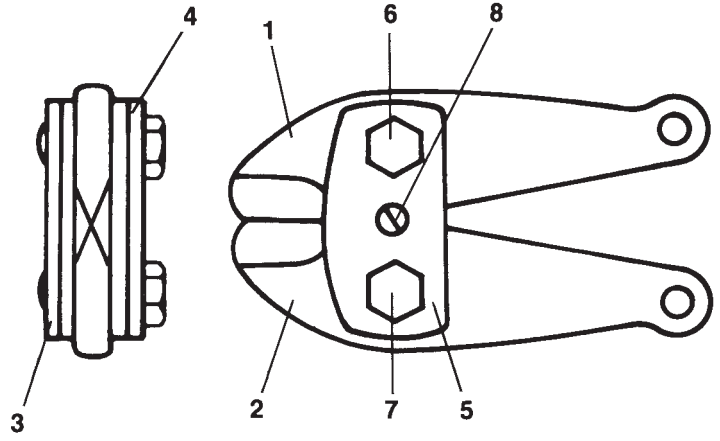

7190 Series Work Station Parts

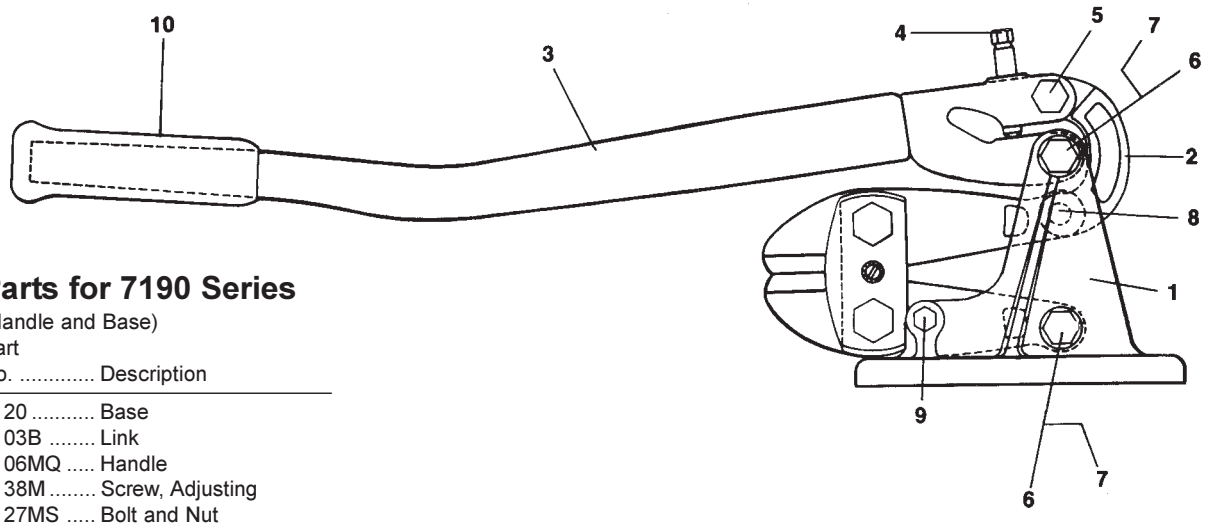

Parts for 7190 Series

(Handle and Base)

Item No.	Part No.	Description
1	7120	Base
2	0103B	Link
3	7106MQ	Handle
4	0138M	Screw, Adjusting
5	0127MS	Bolt and Nut
6	0127SJ	Bolt, Bracket
7	0693C	Nut, Bracket
8	0114B	Pin, Connecting
9	0138KB	Screw, Locking
10	0180M	Grip, Rubber

Cutterhead Parts For 7190HC

Parts for 7190HC

Item No.	Part No.	Description
.....	0113HC	Cutterhead
.....	0112HC	Jaws, Pair
.....	0124	Cutterhead less Jaws
1	0110HC	Jaw, Right
2	0111HC	Jaw, Left
3	0121	Strap, Bottom
4	0120	Strap, Top
5	0156	Lockplate
6	0136	Bolt, Left Thread
7	0135	Bolt, Right Thread
8	0257	Screw, Lockplate

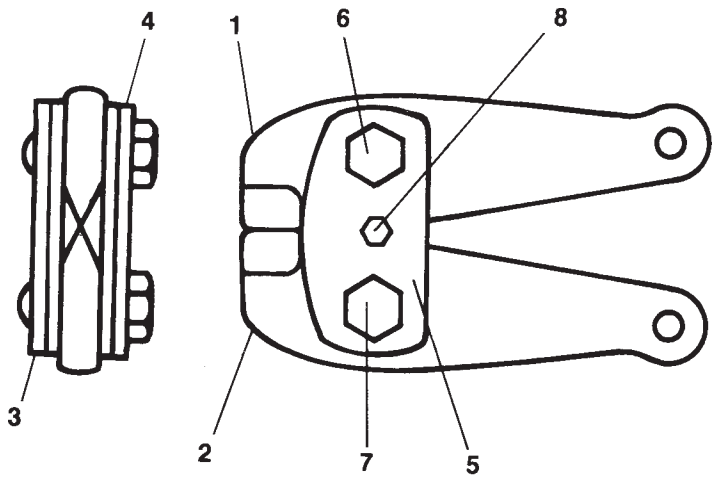

7190 Series Work Station Parts

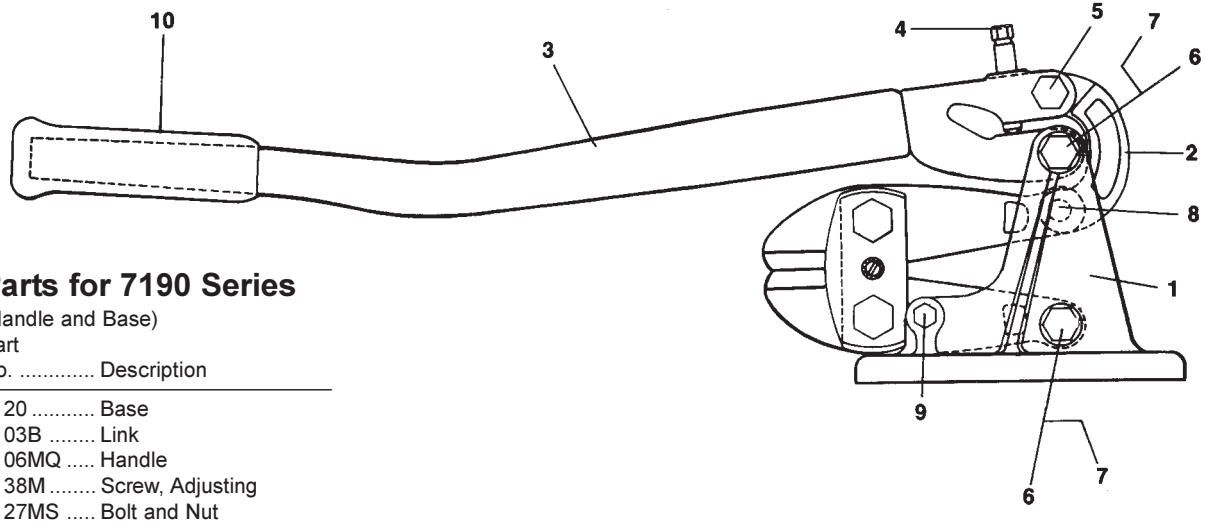

Parts for 7190 Series

(Handle and Base)

Item No.	Part No.	Description
1	7120	Base
2	0103B	Link
3	7106MQ	Handle
4	0138M	Screw, Adjusting
5	0127MS	Bolt and Nut
6	0127SJ	Bolt, Bracket
7	0693C	Nut, Bracket
8	0114B	Pin, Connecting
9	0138KB	Screw, Locking
10	0180M	Grip, Rubber

Cutterhead Parts For 7190NE

Parts for 7190NE

Item No.	Part No.	Description
.....	0113NE	Cutterhead
.....	0112NE	Jaws, Pair
.....	0124	Cutterhead less Jaws
1	0110NE	Jaw, Right
2	0111NE	Jaw, Left
3	0121	Strap, Bottom
4	0120	Strap, Top
5	0156	Lockplate
6	0136	Bolt, Left Thread
7	0135	Bolt, Right Thread
8	0257	Screw, Lockplate

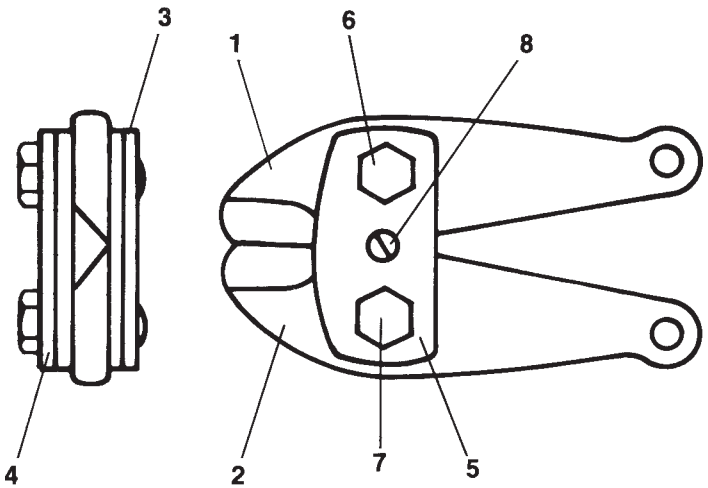

7190 Series Work Station Parts

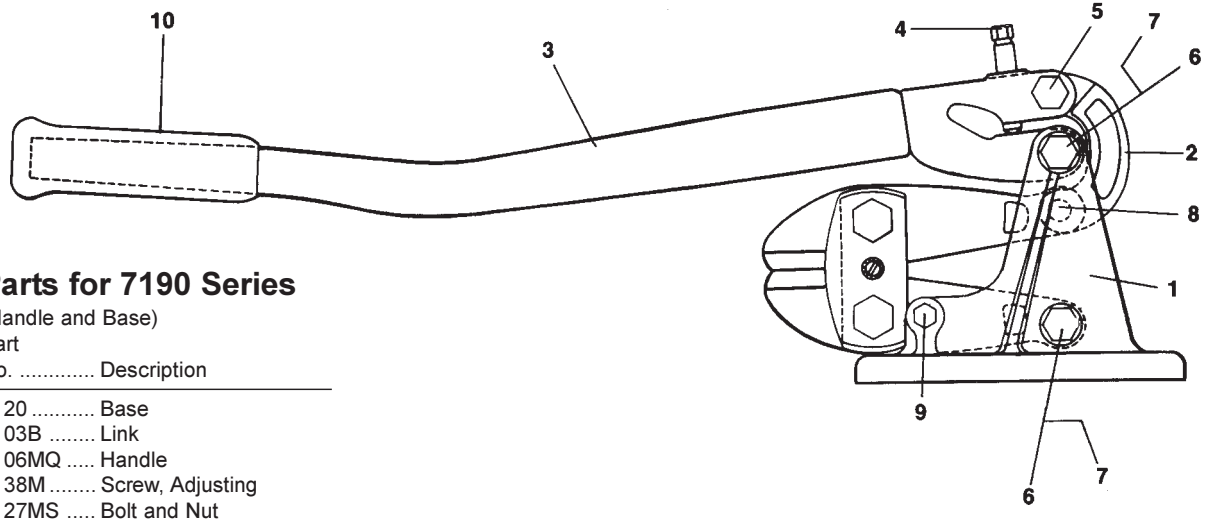

Parts for 7190 Series

(Handle and Base)

Item No.	Part No.	Description
1	7120	Base
2	0103B	Link
3	7106MQ	Handle
4	0138M	Screw, Adjusting
5	0127MS	Bolt and Nut
6	0127SJ	Bolt, Bracket
7	0693C	Nut, Bracket
8	0114B	Pin, Connecting
9	0138KB	Screw, Locking
10	0180M	Grip, Rubber

Cutterhead Parts For 7190TN

Parts for 7190TN

Item No.	Part No.	Description
	0113TN	Cutterhead
	0112TN	Jaws, Pair
1	0110TN	Jaw, Notched
2	0111TN	Jaw, Straight
3	0192TNS	Bolt Assy., Pivot
4	3887	Screw, Wiper

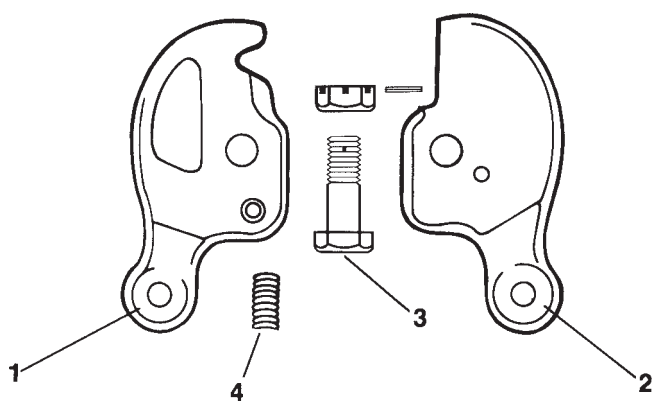

H.K.Porter®

Tips to Easier, Safer Cutting

a. When heavy cutting is involved, it is less strenuous to hold one handle of the tool on the ground using foot pressure. This permits the cutting force to be applied to the upper handle, makes the cutting position less awkward, and utilizes body weight. This allows more power to be transferred to the cutting edges.
b. Use the correct cutting tool for the type, size, and hardness of the metal to be cut.
c. Keep cutter jaws at right angles to piece being cut. Cutting diagonally may twist jaws
d. Do not twist or pry with tool while cutting.
e. Do not exceed the full cut on a material whose hardness is unknown. Test hardness with slow pressure to see if material is being cut. The size of the metal you are cutting is not as important as its hardness.
f. Do not exceed the cutter capacity that is marked on the jaw of the tool or its rating capacity in this catalog.
g. Keep jaw bolts tight and joints oiled at all times.
h. Maintain the original jaw bevel angles when sharpening out of line or chip cutting edges.



Safety Do's and Dont's

Wear your gloves and safety glasses at all times!

Do wear safety shoes.

Do remove oil or grease from your hands, from tools and from the floor and area where you will be working.

Do remember that metal flies when cut. The harder the metal, the farther it will fly.

Do warn those in the area when you intend to use a cutter and protect your fellow workers from flying metal.

Do use all tools as recommended.

Don't attempt to use a cutting tool, hand or power, until you fully understand its use.

Don't forget that metals may fly and cause injury.

Don't use cutters for any application except those listed in this catalog.

Don't use H.K. Porter cutters on energized circuits, wire, or cable.

Safety Precautions

⚠ DANGER

Indicates a high probability that death, severe bodily injury or major property damage could result.



Hard metals may snap off or fly through the air when cut. Always wear safety glasses and warn workers nearby to prevent them from being injured from flying metal. To prevent injury from flying metal, take precautions such as wrapping a cloth or rag around the cutting jaws so metal pieces can not fly.

⚠ WARNING

Is serious but less inevitable. There is some probability that death, severe bodily injury or property damage could result.



The "Safety Alert Symbol" symbol to the left is used to call attention to instructions concerning personal safety. Watch for this symbol, it points out important safety precautions. It means: "ATTENTION! Stay alert, personal safety may be in danger!" Read the message that follows this symbol and be alert to the possibility of personal injury or death resulting from misuse.

The use of any industrial tool may present hazards which can result in serious injury or death. The H.K.Porter® tools listed in this catalog are not exceptions to this rule.

⚠ CAUTION

Is less serious but still demands attention. Indicates a hazard which may result in minor injury or property damage.

READ AND UNDERSTAND ALL DIRECTIONS BEFORE OPERATING ANY H.K. PORTER® MANUAL, HYDRAULIC OR PNEUMATIC TOOL

H.K.Porter®

Cutter Selection

 BARS, FLAT	 CABLE, PRESTRESSED	 NUT SPLITTING	 WIRE, FENCE
 BARS, ROUND	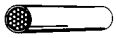 CABLE, RUBBER COVERED	 PADLOCK HASPS	 WIRE, GUY
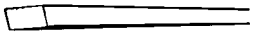 BARS, SQUARE	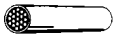 CABLE, SOFT, LARGE	 PIPE, PVC	 WIRE, HOT
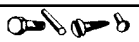 BOLTS, RODS, SCREWS,RIVETS	 CABLE, STEEL	 PLASTIC, FIBER	 WIRE,COPPER
 CABLE (ACAR)	 CHAIN	 ROD REINFORCING	 WIRE, MESH
 CABLE (ACSR)	 CHAIN, HARD ALLOY	 ROD STRAIGHTENER	 WIRE ROPE
 CABLE, ALUMINUM	 EHS GUY STRAND	 STRAPPING STEEL	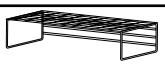 WIRE SHELVING
 CABLE COMMUNICATIONS	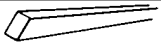 METALS, HARD	TIRE CHAINS	 WIRE, SOLID
CABLE, COPPER	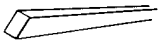 METALS, MEDIUM HARD	 TRUCK TIRE BEADS	WIRE, SPRING
 CABLE, LEAD COVERED	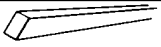 METALS, SOFT	 WIRE, BOX BINDING	 WIRE, STAINLESS STEEL
CABLE, POWER	NAILS, COTTER PINS	WIRE, ELECTRIC	WROUGHT IRON

1. **What is the material to be cut?**
   (See above chart)
2. **What size is the material to be cut?**
   Capacities of all hand-operated cutters are shown opposite each catalog listing. Power tool capacities are shown in the Power Tool Selector chart. Do not exceed listed capacities.
3. **How hard is the material to be cut?**
   Many of the materials illustrated in the chart above are made in varying degrees of hardness. The maxmum hard ness ratings that each hand and power tool is designed to cut are shown under each tool in this catalog.

   Extra Hard Metals:
   Up to Brinell 455/Rockwell C48

   Hard Metals:
   Up to Brinell 400/Rockwell C42

   Medium Hard Metals:
   Up to Brinell 300/Rockwell C31

   Soft Metals:
   Up to Brinell 200/Rockwell C15
4. **Will numerous or few cuts be made in a day?**
   The frequency of cuts to be made should be taken into consideration when choosing a cutter. HKP manufacturers inexpensive hand cutters for light-duty work, heavy-duty cutters for tougher jobs, and hydraulic and pneumatic cutters for extremely hard materials and production cutting.
5. **Is speed a factor in the cutting?**
   Choose the proper cutter to fit the job requirements, whether an occasional cut is called for or fast, continuous, industrial production cutting.

Still not sure?

Send material samples to:
Cooper Hand Tools - Sumter Plant
Industrial Park
Sumter, SC 29154
Attn: HKP Test Material

NOTE: PROVIDE ANSWERS TO AS MANY OF THE QUESTIONS AS POSSIBLE.

WARNING

- Always wear safety glasses/goggles when cutting.
- Cut in a safe area; consider the safety of others in the immediate area.
- The harder the material being cut, the likelier it is to become airborn during cutting.
- Use tools correctly! (Refer to “Engineering Information” section of this catalog)
- Use the correct tool for the work being performed.
- Maintain tools, power supplies, and hoses in safe working condition.

DANGER Never use any H.K. Porter cutters on energized circuits, wire, or cable.

H.K.Porter®

Quality Features of H.K. Porter® Cutters



PRECISION CUTTING EDGES
Accurately beveled for specific types of cuts and materials.

CUTTING JAWS
Alloy tool steel, drop forged, precision ground for maximum wear resistance and longer cutting life

LOCKPLATE
Prevents jaw bolts from turning or loosening. Eliminates "sloppy" head, insures trouble-free operation.

SIMPLE ADJUSTMENT
One adjustment realigns cutting edges properly.

TOGGLE JOINT
Transforms 50 pounds of hand pressure on handles to 4,000 pounds pressure on cutting edges of jaws.

STEEL TUBULAR HANDLES
Greater strength, lighter weight.

HANDLES CLOSER TOGETHER
More cutting power with less strain.

RUBBER GRIPS
Easy on the hands. Firmer grip for user safety.

Jaw Designs

There are four basic jaw designs. They are engineered to give long, trouble-free life and the most efficient cutting of the materials which they are designed to cut.

1 **ANGULAR JAWS**
30° offset jaws have clipper-cut blades, designed for cutting close or flush to a surface. Cuts soft or medium-hard material.

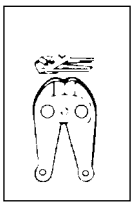

2 **ALL-PURPOSE JAWS**
Can have center- or clipper-cut blades used for broad cutting applications.

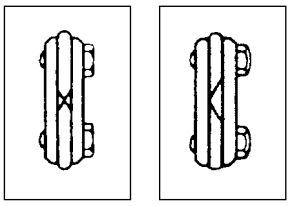

3 **SHORT-NOSED JAWS**
Center-cut, carbide-tipped blades for cutting hard- and non-alloy chains and padlock hasps.

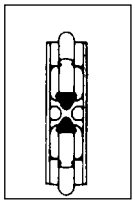

4 **HEAVY-DUTY STRAP JAWS**
Straps keep the cutting edges aligned under the most demanding applications.

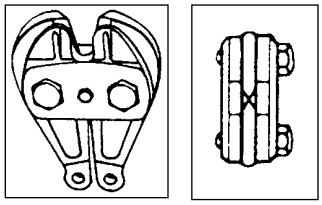

Cutting Blades

Four different cutting blade styles are available for specific types or broad ranges of cutting applications.

1 **CENTER-CUT BLADES**
Slightly rounded cutting edges, beveled on both sides, broaden cutting applications.

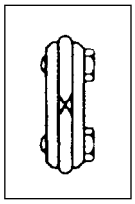

2 **CLIPPER-CUT BLADES**
Blades are beveled on only one side for smooth flush cuts that are close to workpiece.

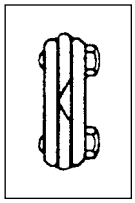

3 **SHEAR-CUT BLADES**
Designed to cut coarse- or fine-strand cable with minimal strand distortion.

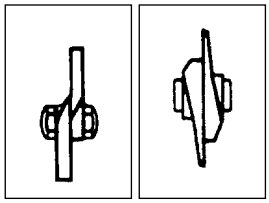

4 **END-CUT BLADES**
Blades are at right angles to handles for easier handling and "head-on" close cutting of materials.

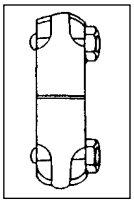

Never use any H.K. Porter cutters on energized circuits, wire, or cable. **⚠ DANGER**

Ordering Replacement Parts

Order replacement parts through your Cooper Tools Distributor. Care should be taken to give accurate information regarding part numbers and descriptions. Include model numbers and serial numbers, as well. Although all parts are available at the factory, we suggest customers stock spare blades, seals, filters and oil for minimum delay in maintaining their units.

Factory Repair Service

HKP units may be returned to factory for repair and reconditioning at any time. A free inspection and estimate of repair charges will be supplied if requested. All returns must be made by prepaid transportation.

How to Sharpen Cutter Jaws

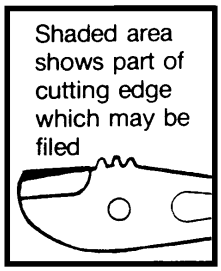

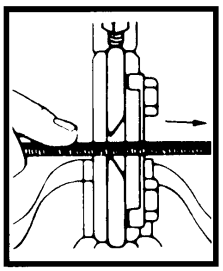

- Remove nicks in jaws by filing straight across cutting edges
- On jaws with equal bevels, file equally from each bevel, keep file flat against bevel
- On jaws with one large bevel, file on that bevel, small bevel must also be restored
- Jaws should not be razor sharp
- Approximately 1/64" (.4mm) should remain flat to form strong, durable edge
- Adjust tool according to the instructions below
- To sharpen shear-cut blades (blades that pass each other like scissors) remove nicks by filing straight across cutting edges
- Finish by running a flat file over inner jaw surface to remove burrs

How to Adjust the Cutter Jaws

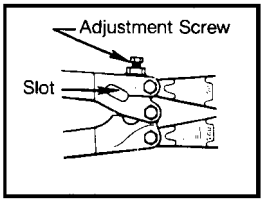

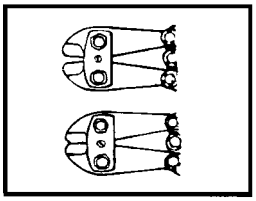

- An adjustment screw is located on the cutter handle above the toggle joints
- If jaw edges are too far apart with handles closed, tighten adjusting screw, this brings cutting edges together
- Cutting edges should be 1/64" (.4mm) apart for longest jaw life
- Oil all joints
- If jaw edges are too close together with the handles apart, loosen adjusting screw until it disappears from the narrow slot in the handle
- Make a cut with the tool in this position (cut will force the slot inward)
- Try to close the handles. If they do not close completely and jaw edges are 1/64" (.4mm) apart, tighten adjusting screw to meet the handle on far side of slot
- Oil all joints
- If jaws are too far apart with handles closed after making cut with adjusting screw backed off, tighten adjusting screw as explained above
- To sharpen shear-cut blades (blades that pass each other, like scissors), remove nicks by filing straight across the cutting edges
- Finish by running a flat file over inner blade surface to remove burrs.

Nicholson® File Recommendations

For Jaw Type	Use File Type
Straight	6", 8" or 10" Mill Bastard
Curved	8", 10" or 12" Half Round Bastard
Straight w/Notch	8", 10" Mill Bastard with one round edge
Notched	8" or 10" Round Bastard

- Choose file size according to size of jaw and/or radius of curve
- Half round files are the most versatile

⚠ DANGER Never use any H.K. Porter cutters on energized circuits, wire, or cable.