Ultra-Low Profile 2.5mm Pitch Battery

9155-100



AVX has been leading the industry with reliable Board-to-Board (BTB) compression connectors for commercial, medical and harsh industrial applications, obtaining the very first contact patent in the early 1990's. The broad range of connectors offers both signal contacts which support 1 Amp/contact up to 40 position as well as low pin count (LPC) power contacts up to 3 Amps/contact.

The newest addition is the Ultra Low Profile (ULP) power connector that supports a 1.3mm compressed height, the lowest on the market. Gold plated Beryllium Copper (BeCu) contacts offers the most reliable and resilient contact performance in this miniature package. The sweeping contact design offers 0.7mm deflection range, long contact wipe and in excess of 40 grams of contact force at minimum operating deflection. All combined, this connector is rated at an unbelievable 5000 mating cycles for mechanical endurance.

APPLICATIONS

- Low profile power, signal, ground or shielding requirements
- Repeatable/Pluggable module or battery pack requirements
- Low profile flex circuit to PCB applications
- Portable devices

FEATURES AND BENEFITS

- High Reliability / High Cycle Life BeCu contacts for maximum system performance
- ULP 1.3mm minimum operating height with 0.7mm "Z" axis compression/tolerance range
- Gold plating supports a broad range applications based on reliability and environments
- 3 Amp contact rating over a -40ºC to +105ºC operating range supports a broad application spectrum

ELECTRICAL

- Current Rating: 3 Amps/Contact
- Voltage Rating: 125VAC

ENVIRONMENTAL

- Operating Temperature: -40ºC to +105ºC

MECHANICAL

- Insulator Material: Glass-Filled Nylon 46; UL94 V-O
- Contact Material: Beryllium Copper
- Plating: Gold over Nickel
- Durability: 5000 Cycles

HOW TO ORDER

00 — Prefix

9155 — Series

00X — No. of Ways
2 = 002
3 = 003

10X — Low Profile Battery Connector

Code	Description	Operating Height
100	Low Profile Battery Connector No Stop	1.30 (0.051)
101	Low Profile Battery Connector Stop	1.30 (0.051)

00X — Plating Option

Code	Description
006	0.4µm Selective Gold, Standard
008	0.8µm Selective Gold, Special Order

RoHS COMPLIANT

Ultra-Low Profile 2.5mm Pitch Battery

9155-100

AVX INTERCONNECT
A KYOCERA GROUP COMPANY

2 WAY LOW PROFILE CONNECTOR
NO STOP

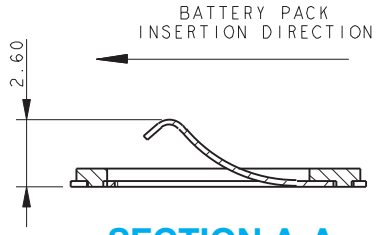

SECTION A-A

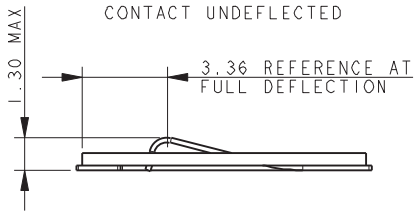

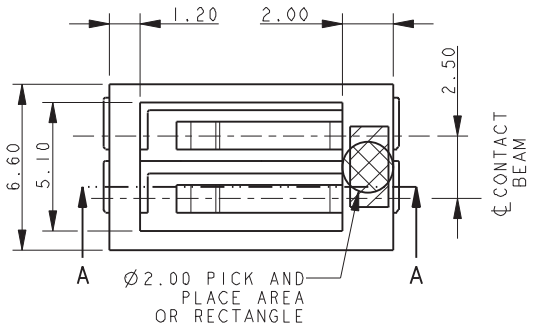

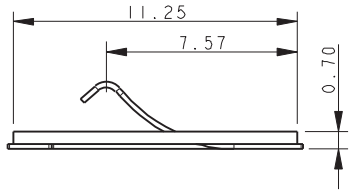

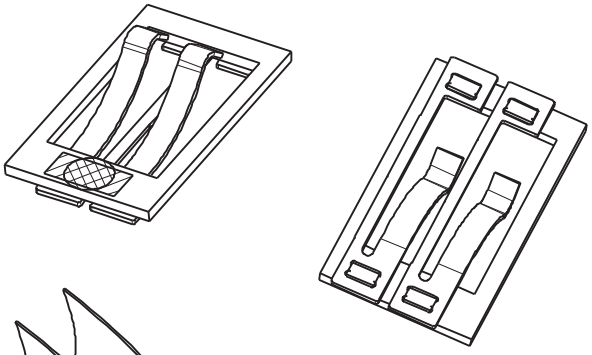

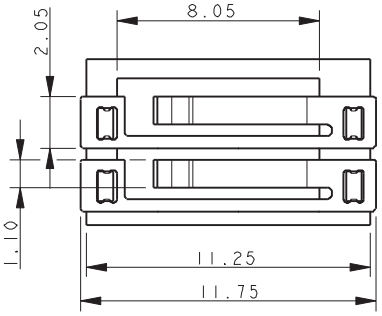

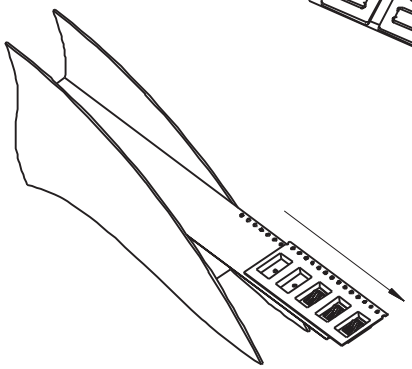

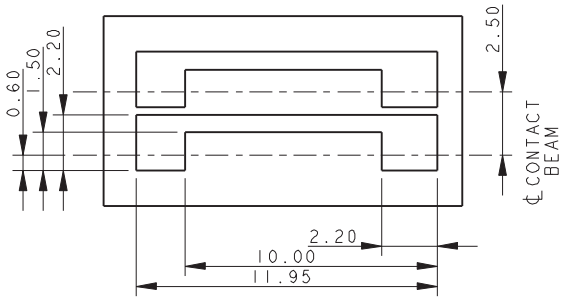

SUGGESTED PCB LAYOUT

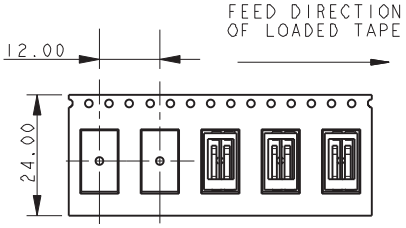

PACKING DETAILS

REEL QTY	1500
LEADER	500MM
TRAILER	500MM

NOTES:
1. FOR FULL PRODUCT SPECIFICATION REFER TO ELCO SPECIFICATION 201-01-094.
2. MATERIALS: CONTACT - COPPER ALLOY, INSULATOR - GLASS FILLED NYLON. COLOR: BLACK.
3. TOLERANCE ±0.20 UNLESS SPECIFIED.
4. PACKING DETAILS SEE TABLE.
5. FOR MATING PAD DETAILS REFER TO PAGE 103.

Ultra-Low Profile 2.5mm Pitch Battery

9155-100

AVX INTERCONNECT
A KYOCERA GROUP COMPANY

3 WAY LOW PROFILE CONNECTOR

NO STOP

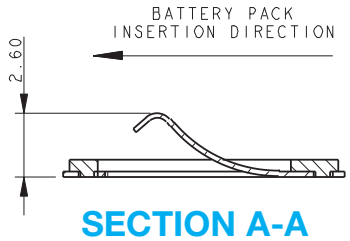

SECTION A-A

CONTACT UNDEFLECTED

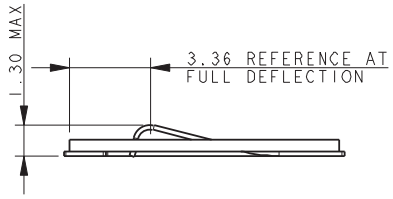

CONTACT SHOWN WITH STOP
RESTING ON PCB

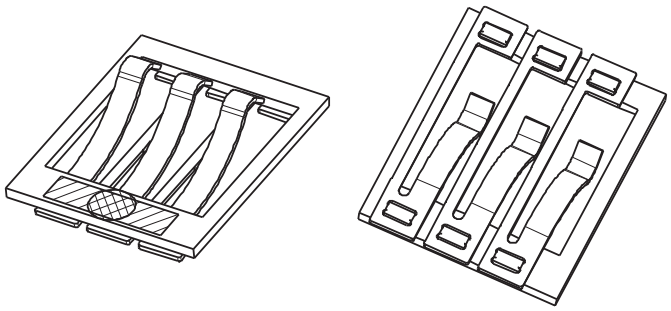

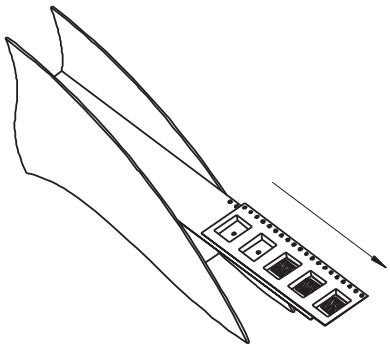

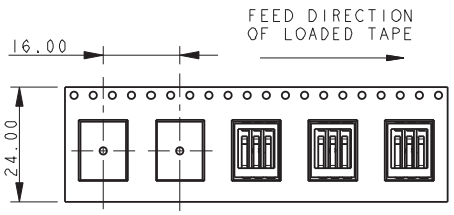

PACKING DETAILS

REEL QTY	1200
LEADER	500MM
TRAILER	500MM

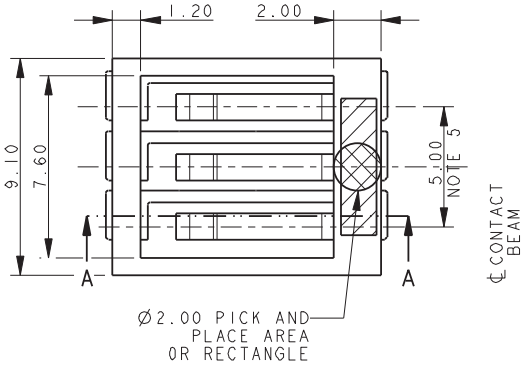

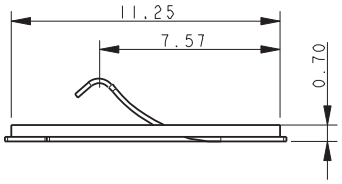

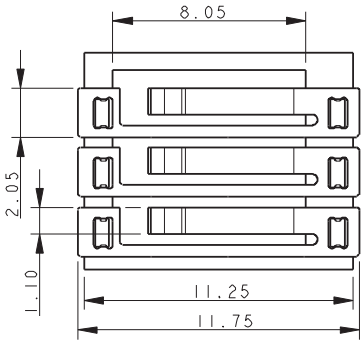

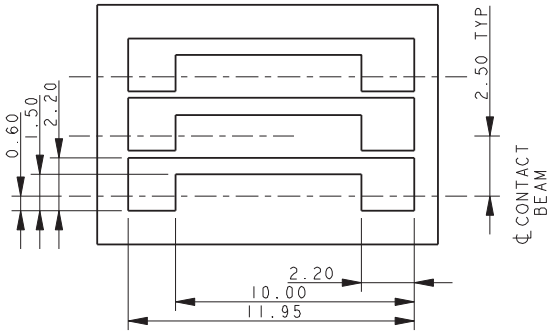

SUGGESTED PCB LAYOUT

NOTES:
1. FOR FULL PRODUCT SPECIFICATION REFER TO ELCO SPECIFICATION 201-01-094.
2. MATERIALS: CONTACT - COPPER ALLOY, INSULATOR - GLASS FILLED NYLON. COLOR: BLACK.
3. TOLERANCE ±0.20 UNLESS SPECIFIED.
4. PACKING DETAILS SEE TABLE.
5. 2 EQUAL PITCHES @ 2.50 = 5.00.
6. FOR MATING PAD DETAILS REFER TO PAGE 103.

Ultra-Low Profile 2.5mm Pitch Battery

9155-100

AVX INTERCONNECT
A KYOCERA GROUP COMPANY

2 WAY LOW PROFILE CONNECTOR WITH STOP

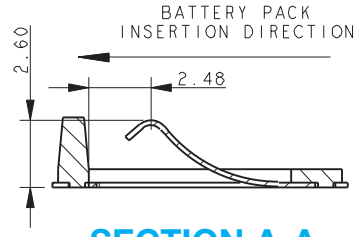

SECTION A-A

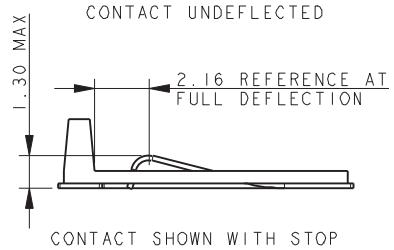

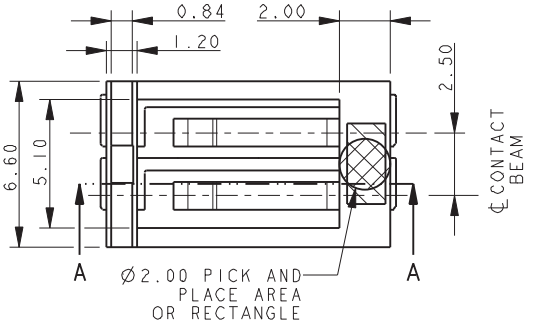

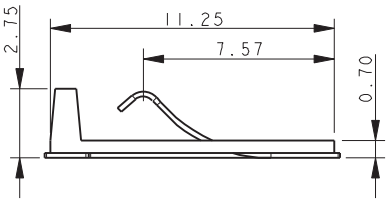

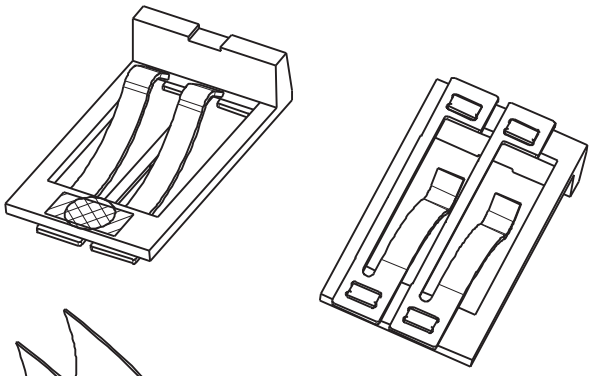

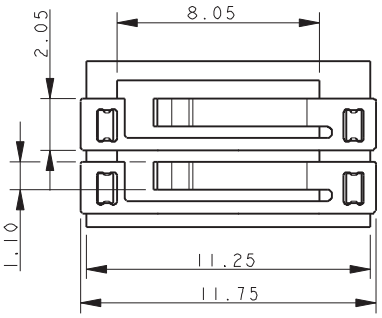

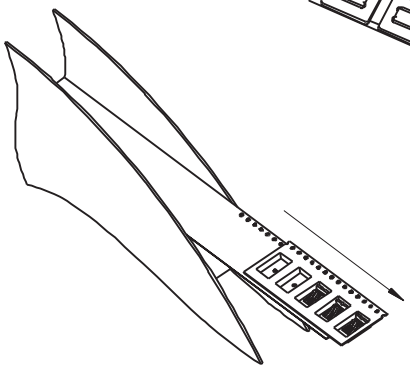

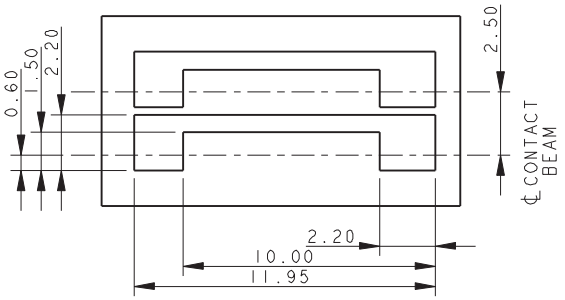

SUGGESTED PCB LAYOUT

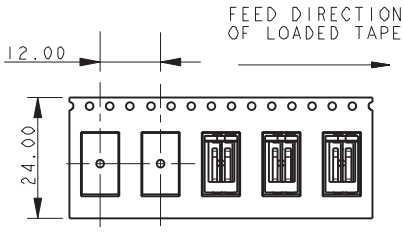

PACKING DETAILS

REEL QTY	1500
LEADER	500MM
TRAILER	500MM

NOTES:
1. FOR FULL PRODUCT SPECIFICATION REFER TO ELCO SPECIFICATION 201-01-094.
2. MATERIALS: CONTACT - COPPER ALLOY, INSULATOR - GLASS FILLED NYLON. COLOR: BLACK.
3. TOLERANCE ±0.20 UNLESS SPECIFIED.
4. PACKING DETAILS SEE TABLE.
5. FOR MATING PAD DETAILS REFER TO PAGE 103.

Ultra-Low Profile 2.5mm Pitch Battery

9155-100

AVX INTERCONNECT
A KYOCERA GROUP COMPANY

3 WAY LOW PROFILE CONNECTOR WITH STOP

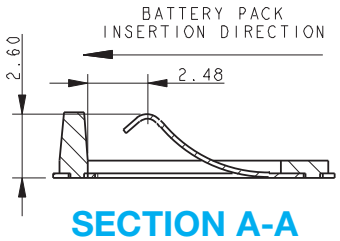

SECTION A-A

CONTACT UNDEFLECTED

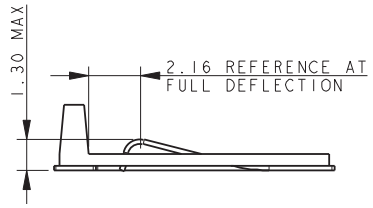

CONTACT SHOWN WITH STOP
RESTING ON PCB

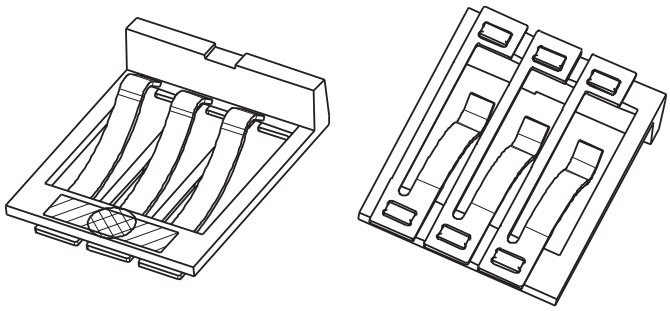

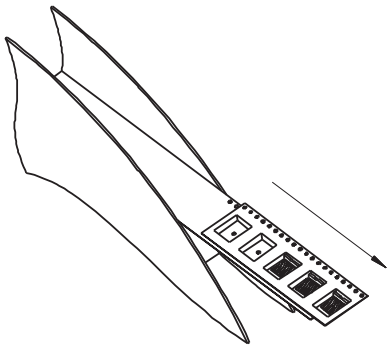

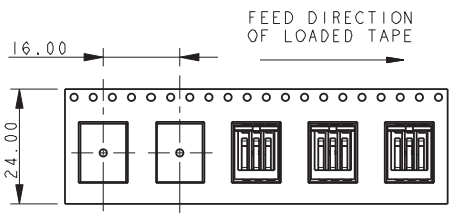

PACKING DETAILS

REEL QTY	1200
LEADER	500MM
TRAILER	500MM

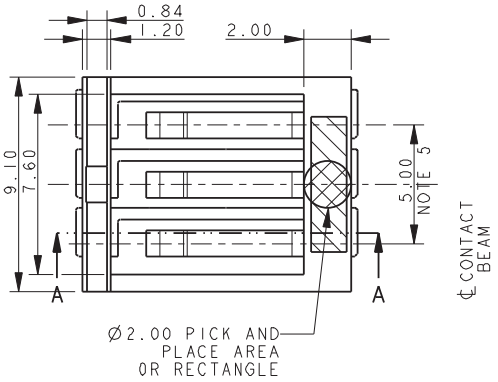

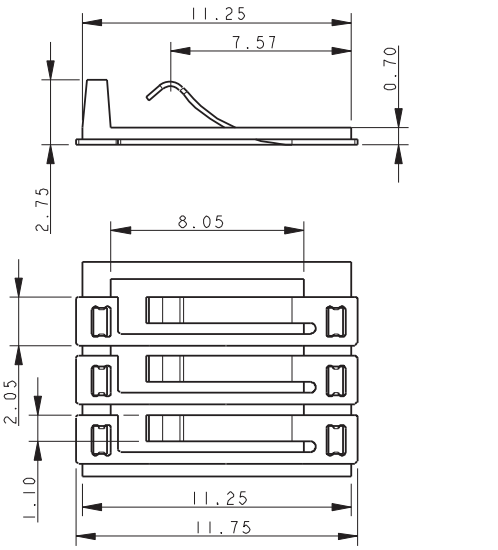

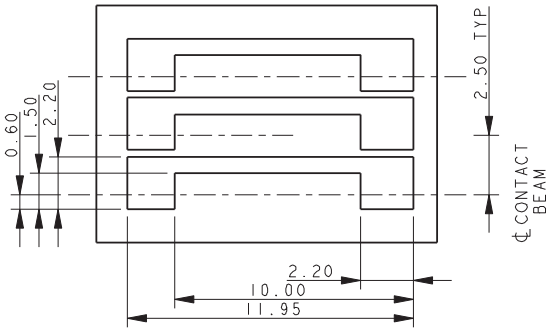

SUGGESTED PCB LAYOUT

NOTES:
1. FOR FULL PRODUCT SPECIFICATION REFER TO ELCO SPECIFICATION 201-01-094.
2. MATERIALS: CONTACT - COPPER ALLOY, INSULATOR - GLASS FILLED NYLON. COLOR: BLACK.
3. TOLERANCE ±0.20 UNLESS SPECIFIED.
4. PACKING DETAILS SEE TABLE.
5. 2 EQUAL PITCHES @ 2.50 = 5.00.
6. FOR MATING PAD DETAILS REFER TO PAGE 103.

Ultra-Low Profile 2.5mm Pitch Battery

9155-100

LOW PROFILE MATING PADS

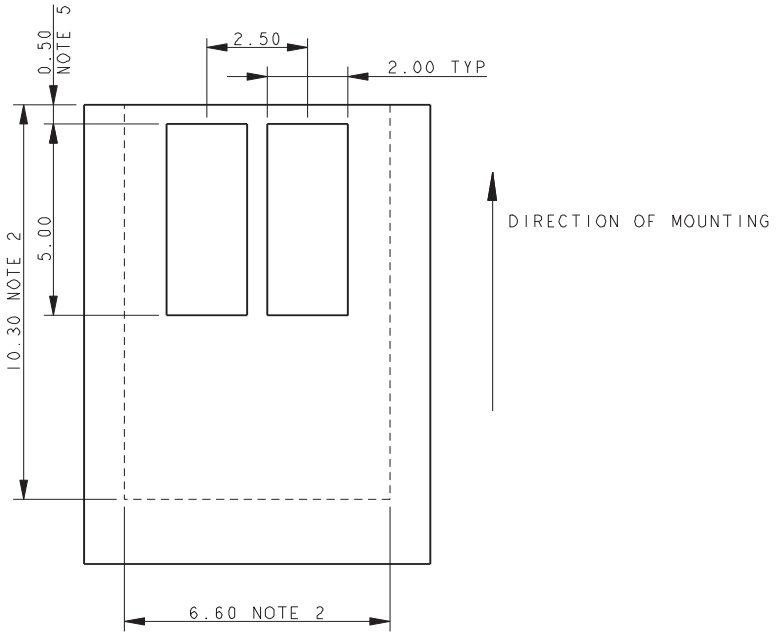

2 WAY MATING PADS

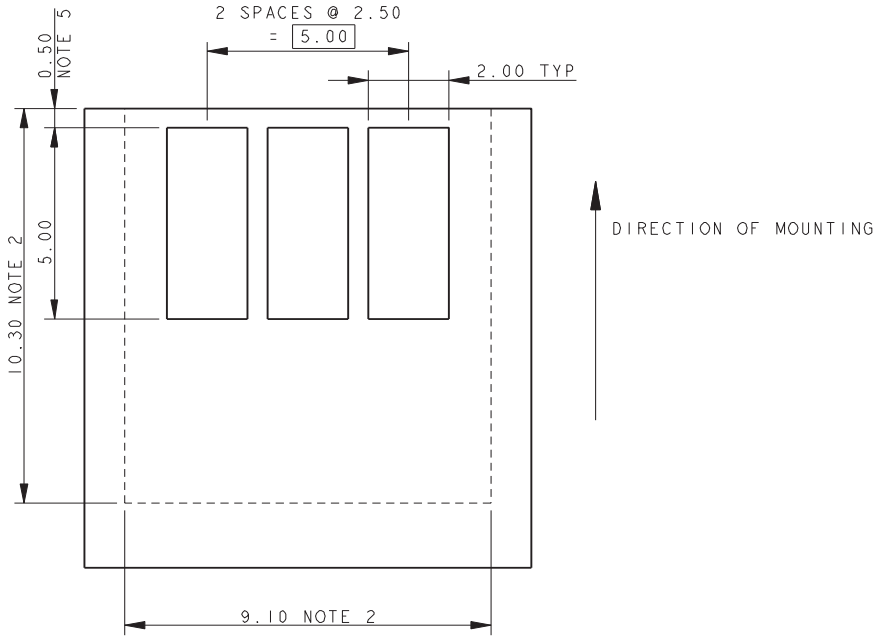

3 WAY MATING PADS

NOTES:
1. SUGGESTED MATING PADS FOR LOW PROFILE BATTERY CONNECTORS.
2. OUTLIE OF CONNECTOR.
3. PROFERED PLATING ON PADS GOLD OVER NICKEL.
4. REFERENCE DIMENSIONS.
5. DIMENSION TO EDGE OF BOARD FOR CONNECTORS WITH STOP.