molex
one company > a world of innovation

This document was generated on 03/26/2010

PLEASE CHECK WWW.MOLEX.COM FOR LATEST PART INFORMATION

Part Number: 0082285714

Status: Active

Description: 1.27mm (.050") Pitch Round Conductor Flat Cable - 28 AWG (7 x 36) Stranded Tinned, 14 Circuits, Reel 30.48m (100.0') Length

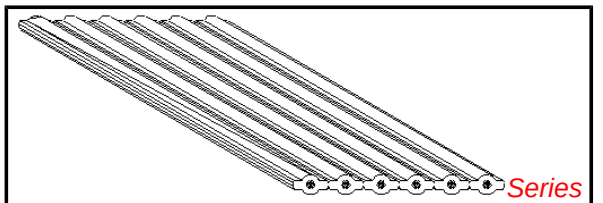

image - Reference only

Documents:
Drawing (PDF)
RoHS Certificate of Compliance (PDF)

Agency Certification

CSA	LR61126
UL	E61522

General

Product Family	Cable
Series	6800
Crimp Quality Equipment	Yes
Geographic Area	Asia
Product Name	Ribbon

Physical

Cable Length	30.48m (100.0')
Circuits (Loaded)	14
Insulation	PVC
Packaging Type	Reel
Pitch - Term. Interface (in)	0.050 In
Pitch - Term. Interface (mm)	1.27 mm
Temperature Range - Operating	-20°C to +105°C
Wire Size AWG	28
Wire/Cable Type	(7x36) Stranded, Tinned

Electrical

Current - Maximum per Contact	N/A
Voltage - Maximum	300V

Material Info

Old Part Number	6800-14-100B

Reference - Drawing Numbers

Sales Drawing	SD-6800-001

EU RoHS
ELV and RoHS Compliant
REACH SVHC
Not Reviewed
Halogen-Free Status
Not Reviewed

China RoHS

Need more information on product environmental compliance?

Email productcompliance@molex.com
For a multiple part number RoHS Certificate of Compliance, click here

Please visit the Contact Us section for any non-product compliance questions.

Search Parts in this Series
6800Series

Use With
70121 MX-50™ Slimline Ribbon Cable.
90584 Picoflex® PF-50 IDT Receptacle

This document was generated on 03/26/2010

PLEASE CHECK WWW.MOLEX.COM FOR LATEST PART INFORMATION

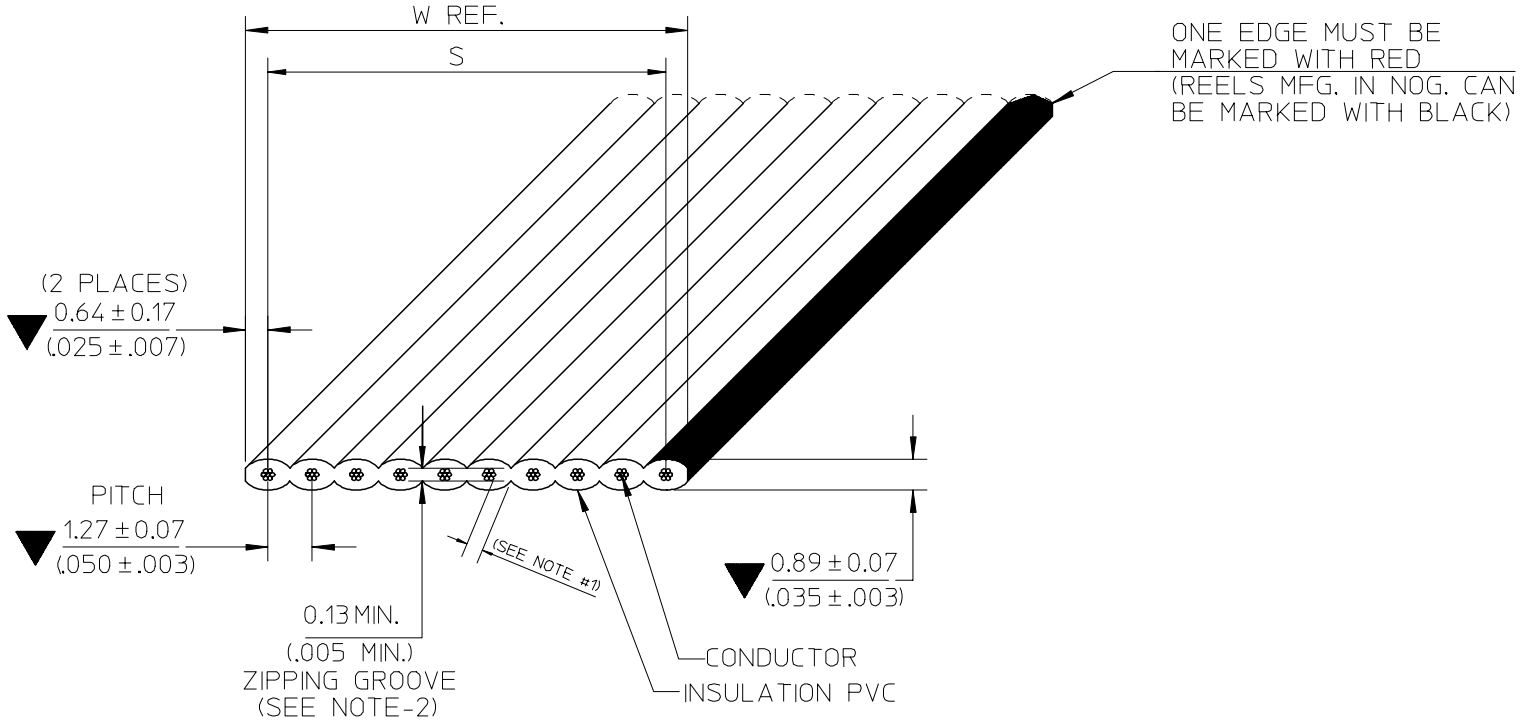

NOTE :
1. THE CABLE SHALL HAVE A MINIMUM OF 0.178mm. (.007") THICKNESS INSULATION AT ANY POINT
2. RIP TEST:
   - THE 0.13mm. (.005") ZIPPING GROOVE SHALL BE CAPABLE OF BEING RIPPED BY HAND WITHIN THE RECESS,WITHOUT EXPOSING THE ADJACENT CONDUCTORS
3. RoHS AND LEAD FREE COMPLIANT
4. SPECIAL REQUIREMENT: N/A

REV. HISTORY	EC NO.	DETAIL	DATE
B	E-07-0748	B_1 : ADD NON-OPERATING TEMP.	07/11/23
A	N/A	NEW RELEASE	06/07/12

SEE CHANGE DETAIL.
EC NO: THL2008-0015 2007/11/28
DRWN:CPANSAKHOM 2007/11/29
CH'KD:DNARINTARA 2007/12/04
APPR:SVIRATJAPOL 2007/12/04
DESCRIPTION
B
REV

QUALITY SYMBOLS
▼=3
▽=0

GENERAL TOLERANCES (UNLESS SPECIFIED)

	mm	INCH
4 PLACES	± ---	± ---
3 PLACES	± ---	± ---
2 PLACES	± ---	± ---
1 PLACE	± ---	± ---
ANGULAR ±---°		

DRAFT WHERE APPLICABLE MUST REMAIN WITHIN DIMENSIONS

DIMENSION STYLE: MM/IN
SCALE: NTS
DESIGN UNITS: INCH
THIRD ANGLE PROJECTION

DRAWN BY: CPANSAKHOM DATE: 2006/07/12
CHECKED BY: PMEECHAI DATE: 2006/07/12
APPROVED BY: SVIRATJAPOL DATE: 2006/07/12

TITLE: FCB ROUND CONDUCTOR 1.27MM(.050)CENTERS PVC. 28AWG STR TINNED

molex MOLEX INCORPORATED

MATERIAL NO.: SEE CHART
DOCUMENT NO.: SD-6800-001
SHEET NO.: 1 OF 3
SIZE: A4

THIS DRAWING CONTAINS INFORMATION THAT IS PROPRIETARY TO MOLEX INCORPORATED AND SHOULD NOT BE USED WITHOUT WRITTEN PERMISSION

SPECIFICATIONS

PHYSICAL

CONDUCTOR SPACING	1.27(.050") ℄ TO ℄
WIRE GAUGE	28 AWG(7/36) AWG, STRANDED TINNED
INSULATION	P.V.C GRAY (LEAD FREE)

AGENCY

U.L. STYLE NO.	2651
TEMPERATURE RATING	-20°C TO 105°C
VOLTAGE RATING	300V.MAX.
FLAMMABILITY RATING	VW-1

ELECTRICAL

CONDUCTOR RESISTANCE (D.C.)	68 m OHMS/FT. MAX.
CHARACTERISTIC IMPEDANCE	123 OHMS NOM. (GS) 100 OHMS NOM. (GSG)
CAPACITANCE	9.1 pF/FT. NOM. (GS) 17.0 pF/FT. NOM. (GSG)
PROPAGATION DELAY	1.4 ns/FT. NOM.
INSULATION RESISTANCE	10M OHMS (10FT. SAMPLE)
DIELECTRIC WITHSTAND VOLTAGE	2000 VRMS/MINUTE

GENERAL

B1 NON-OPERATING TEMPERATURE	-20°C TO 105°C
FAULTS AND/OR SPLICES	1/REEL MAX. 100^{+3}_{-0}FT. ($30.48^{+0.914}_{-0}$ M.)/REEL 20FT. (6.096M.) MIN. LENGTH

SEE CHANGE DETAIL.
EC NO: THL2008-0015
DRWN:CPANSAKHOM 2007/11/28
CH'KD:DNARINTARA 2007/11/29
APPR:SVIRATJAPOL 2007/12/04
DESCRIPTION
B
REV

QUALITY SYMBOLS
▼ =
Ⓒ =

GENERAL TOLERANCES (UNLESS SPECIFIED)

	mm	INCH
4 PLACES	± ---	± ---
3 PLACES	± ---	± ---
2 PLACES	± ---	± ---
1 PLACE	± ---	± ---
ANGULAR ±---°		

DRAFT WHERE APPLICABLE MUST REMAIN WITHIN DIMENSIONS

DIMENSION STYLE: MM/IN
SCALE: NTS
DESIGN UNITS: INCH
THIRD ANGLE PROJECTION

DRAWN BY	CPANSAKHOM	DATE 2006/07/12
CHECKED BY	PMEECHAI	DATE 2006/07/12
APPROVED BY	SVIRATJAPOL	DATE 2006/07/12

TITLE: FCB ROUND CONDUCTOR 1.27MM(.050)CENTERS PVC. 28AWG STR TINNED

molex MOLEX INCORPORATED

MATERIAL NO.: SEE CHART
DOCUMENT NO.: SD-6800-001
SHEET NO.: 2 OF 3
SIZE: A4

THIS DRAWING CONTAINS INFORMATION THAT IS PROPRIETARY TO MOLEX INCORPORATED AND SHOULD NOT BE USED WITHOUT WRITTEN PERMISSION

ENGINEERING NO.

6800-XX-XXXX
A B C D

A : CABLE 1.27mm. (.050") CENTERS 28AWG STRANDED TINNED
B : CONDUCTOR SIZE (AVAILABILITY 3 THROUGH 50)
C : CABLE LENGTH 100FT. (30.48M.)
D : A = INCHES
B = FEET

DIMENSIONS INCHES (MM)				SHIPPED ON 100FT. REELS	
ENG. NO.	NO.OF COND.	DIMENSION S	DIM. W (REF)	ENGINEERING NO.	ORDER NO.
6800- 3	3	2.54±0.18 (.100±.007)	3.81(.150)	6800-03-100B	82-28-5703
6800- 4	4	3.81±0.18 (.150±.007)	5.08(.200)	6800-04-100B	82-28-5704
6800- 5	5	5.08±0.18 (.200±.007)	6.35(.250)	6800-05-100B	82-28-5705
6800- 6	6	6.35±0.18 (.250±.007)	7.62(.300)	6800-06-100B	82-28-5706
6800- 7	7	7.62±0.18 (.300±.007)	8.89(.350)	6800-07-100B	82-28-5707
6800- 8	8	8.89±0.18 (.350±.007)	10.16(.400)	6800-08-100B	82-28-5708
6800- 9	9	10.16±0.18 (.400±.007)	11.43(.450)	6800-09-100B	82-28-5709
6800-10	10	11.43±0.18 (.450±.007)	12.70(.500)	6800-10-100B	82-28-5710
6800-11	11	12.70±0.18 (.500±.007)	13.97(.550)	6800-11-100B	82-28-5711
6800-12	12	13.97±0.18 (.550±.007)	15.24(.600)	6800-12-100B	82-28-5712
6800-13	13	15.24±0.18 (.600±.007)	16.51(.650)	6800-13-100B	82-28-5713
6800-14	14	16.51±0.18 (.650±.007)	17.78(.700)	6800-14-100B	82-28-5714
6800-15	15	17.78±0.18 (.700±.007)	19.05(.750)	6800-15-100B	82-28-5715
6800-16	16	19.05±0.23 (.750±.009)	20.32(.800)	6800-16-100B	82-28-5716
6800-17	17	20.32±0.23 (.800±.009)	21.59(.850)	6800-17-100B	82-28-5717
6800-18	18	21.59±0.23 (.850±.009)	22.86(.900)	6800-18-100B	82-28-5718
6800-19	19	22.86±0.23 (.900±.009)	24.13(.950)	6800-19-100B	82-28-5719
6800-20	20	24.13±0.23 (.950±.009)	25.40(1.000)	6800-20-100B	82-28-5720
6800-21	21	25.40±0.23 (1.000±.009)	26.67(1.050)	6800-21-100B	82-28-5721
6800-22	22	26.67±0.23 (1.050±.009)	27.94(1.100)	6800-22-100B	82-28-5722
6800-23	23	27.94±0.23 (1.100±.009)	29.21(1.150)	6800-23-100B	82-28-5723
6800-24	24	29.21±0.23 (1.150±.009)	30.48(1.200)	6800-24-100B	82-28-5724
6800-25	25	30.48±0.23 (1.200±.009)	31.75(1.250)	6800-25-100B	82-28-5725
6800-26	26	31.75±0.23 (1.250±.009)	33.02(1.300)	6800-26-100B	82-28-5726
6800-27	27	33.02±0.23 (1.300±.009)	34.29(1.350)	6800-27-100B	82-28-5727
6800-28	28	34.29±0.23 (1.350±.009)	35.56(1.400)	6800-28-100B	82-28-5728
6800-29	29	35.56±0.23 (1.400±.009)	36.83(1.450)	6800-29-100B	82-28-5729
6800-30	30	36.83±0.23 (1.450±.009)	38.10(1.500)	6800-30-100B	82-28-5730
6800-31	31	38.10±0.23 (1.500±.009)	39.37(1.550)	6800-31-100B	82-28-5731
6800-32	32	39.37±0.23 (1.550±.009)	40.64(1.600)	6800-32-100B	82-28-5732
6800-33	33	40.64±0.23 (1.600±.009)	41.91(1.650)	6800-33-100B	82-28-5733
6800-34	34	41.91±0.23 (1.650±.009)	43.18(1.700)	6800-34-100B	82-28-5734
6800-35	35	43.18±0.23 (1.700±.009)	44.45(1.750)	6800-35-100B	82-28-5735
6800-36	36	44.45±0.23 (1.750±.009)	45.72(1.800)	6800-36-100B	82-28-5736
6800-37	37	45.72±0.28 (1.800±.011)	46.99(1.850)	6800-37-100B	82-28-5737
6800-38	38	46.99±0.28 (1.850±.011)	48.26(1.900)	6800-38-100B	82-28-5738
6800-39	39	48.26±0.28 (1.900±.011)	49.53(1.950)	6800-39-100B	82-28-5739
6800-40	40	49.53±0.28 (1.950±.011)	50.80(2.000)	6800-40-100B	82-28-5740
6800-41	41	50.80±0.28 (2.000±.011)	52.07(2.050)	6800-41-100B	82-28-5741
6800-42	42	52.07±0.28 (2.050±.011)	53.34(2.100)	6800-42-100B	82-28-5742
6800-43	43	53.34±0.28 (2.100±.011)	54.61(2.150)	6800-43-100B	82-28-5743
6800-44	44	54.61±0.28 (2.150±.011)	55.88(2.200)	6800-44-100B	82-28-5744
6800-45	45	55.88±0.28 (2.200±.011)	57.15(2.250)	6800-45-100B	82-28-5745
6800-46	46	57.15±0.28 (2.250±.011)	58.42(2.300)	6800-46-100B	82-28-5746
6800-47	47	58.42±0.28 (2.300±.011)	59.69(2.350)	6800-47-100B	82-28-5747
6800-48	48	59.69±0.28 (2.350±.011)	60.96(2.400)	6800-48-100B	82-28-5748
6800-49	49	60.96±0.28 (2.400±.011)	62.23(2.450)	6800-49-100B	82-28-5749
6800-50	50	62.23±0.28 (2.450±.011)	63.50(2.500)	6800-50-100B	82-28-5750

SEE CHANGE DETAIL.
EC NO: THL2008-0015
DRWN:CPANSAKHOM 2007/11/28
CH'KD:DNARINTARA 2007/11/29
APPR:SVIRATJAPOL 2007/12/04
REV B

DESCRIPTION

QUALITY SYMBOLS

GENERAL TOLERANCES (UNLESS SPECIFIED)

	mm	INCH
4 PLACES	±.---	±.---
3 PLACES	±.---	±.---
2 PLACES	±.---	±.---
1 PLACE	±.---	±.---
ANGULAR	±--.-°	

DRAFT WHERE APPLICABLE MUST REMAIN WITHIN DIMENSIONS

DIMENSION STYLE MM/IN

DRAWN BY CPANSAKHOM DATE 2006/07/12
CHECKED BY PMEECHAI DATE 2006/07/12
APPROVED BY SVIRATJAPOL DATE 2006/07/12
MATERIAL NO. SEE CHART

SCALE NTS
DESIGN UNITS INCH
THIRD ANGLE PROJECTION

TITLE
FCB ROUND CONDUCTOR
1.27MM(.050)CENTERS PVC.
28AWG STR TINNED

molex MOLEX INCORPORATED

DOCUMENT NO. SD-6800-001
SHEET NO. 3 OF 3
SIZE A4

THIS DRAWING CONTAINS INFORMATION THAT IS PROPRIETARY TO MOLEX INCORPORATED AND SHOULD NOT BE USED WITHOUT WRITTEN PERMISSION