molex
one company > a world of innovation

This document was generated on 03/29/2010

PLEASE CHECK WWW.MOLEX.COM FOR LATEST PART INFORMATION

Part Number: 0082265813

Status: Active

Description: 2.54mm (.100") Pitch Round Conductor Flat Cable - 26 AWG (7 x 34) Stranded, Topcoat, 13 Circuits, Reel 30.48m (100.0') Length

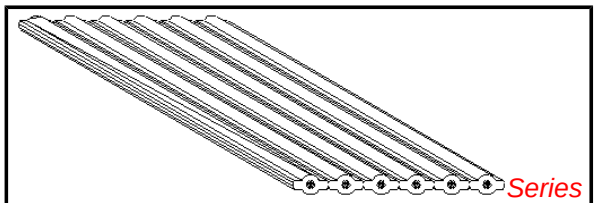

image - Reference only

Documents:
Drawing (PDF)
RoHS Certificate of Compliance (PDF)

Agency Certification

CSA	LR61126
UL	E61522

General

Product Family	Cable
Series	8996
Crimp Quality Equipment	Yes
Geographic Area	Asia
Product Name	Ribbon

Physical

Cable Length	30.48m (100.0')
Circuits (Loaded)	13
Insulation	PVC
Packaging Type	Reel
Pitch - Term. Interface (in)	0.100 In
Pitch - Term. Interface (mm)	2.54 mm
Temperature Range - Operating	-20°C to +105°C
Wire Size AWG	26
Wire/Cable Type	(7x34) Stranded, Topcoat

Electrical

Current - Maximum per Contact	N/A
Voltage - Maximum	300V

Material Info

Old Part Number	8996-13-100B

Reference - Drawing Numbers

Sales Drawing	SD-8996-001

EU RoHS
ELV and RoHS Compliant
REACH SVHC
Not Reviewed
Halogen-Free Status
Not Reviewed

China RoHS

Need more information on product environmental compliance?

Email productcompliance@molex.com
For a multiple part number RoHS Certificate of Compliance, click here

Please visit the Contact Us section for any non-product compliance questions.

Search Parts in this Series
8996Series

Use With
70400 C-Grid SL™ IDT Connector Assembly. 70475 SL™ IDT Connector Assembly. 7720 KK® IDT Double Cantilever Contact

This document was generated on 03/29/2010

PLEASE CHECK WWW.MOLEX.COM FOR LATEST PART INFORMATION

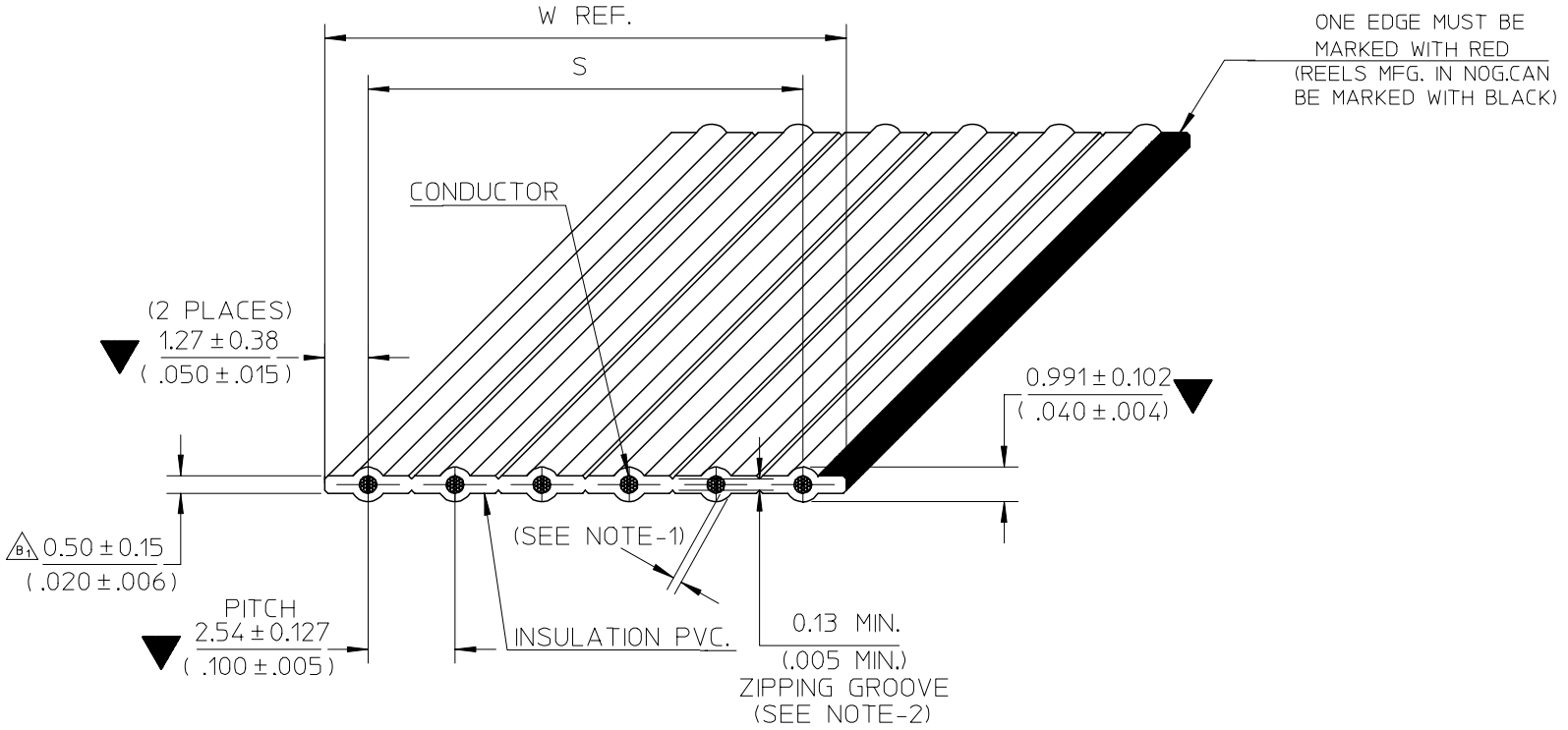

NOTE :
1. THE CABLE SHALL HAVE A MINIMUM OF 0.178mm. (.007") THICKNESS INSULATION AT ANY POINT
2. RIP TEST:
   - THE 0.13mm. (.005") ZIPPING GROOVE SHALL BE CAPABLE OF BEING RIPPED BY HAND WITHIN THE RECESS,WITHOUT EXPOSING THE ADJACENT CONDUCTORS
3. RoHS AND LEAD FREE COMPLIANT
4. SPECIAL REQUIREMENT: N/A

REV.	EC NO.	DETAIL	DATE
B	E-07-0748	B_3: ADD NON-OPERATING TEMP. B_2: ADD SOLDERING CONDITION B_1: CHANGE WEB THICKNESS	07/09/26
A	N/A	NEW RELEASE	06/07/18

SEE CHANGE DETAIL
EC NO: THL2008-0015
DRWN:CPANSAKHOM 2007/11/28
CH'KD:DNARINTARA 2007/11/29
APPR:SVIRATJAPOL 2007/12/04
DESCRIPTION
B
REV

QUALITY SYMBOLS
▼=3
▽C=0

GENERAL TOLERANCES (UNLESS SPECIFIED)

	mm	INCH
4 PLACES	± ---	± ---
3 PLACES	± ---	± ---
2 PLACES	± ---	± ---
1 PLACE	± ---	± ---
ANGULAR ±---°		

DRAFT WHERE APPLICABLE MUST REMAIN WITHIN DIMENSIONS

DIMENSION STYLE: MM/IN
SCALE: NTS
DESIGN UNITS: INCH
THIRD ANGLE PROJECTION

DRAWN BY: CPANSAKHOM DATE: 2006/07/18
CHECKED BY: PMEECHAI DATE: 2006/07/18
APPROVED BY: SVIRATJAPOL DATE: 2006/07/18

TITLE: FCB ROUND CONDUCTOR 2.54MM(.100)CENTER PVC. 26AWG STRANDED TOPCOATED

molex MOLEX INCORPORATED

MATERIAL NO.: SEE CHART
DOCUMENT NO.: SD-8996-001
SHEET NO.: 1 OF 3
SIZE: A4

THIS DRAWING CONTAINS INFORMATION THAT IS PROPRIETARY TO MOLEX INCORPORATED AND SHOULD NOT BE USED WITHOUT WRITTEN PERMISSION

SPECIFICATIONS

PHYSICAL

CONDUCTOR SPACING	2.54 (.100") ℄ TO ℄
WIRE GAUGE	26 AWG(7/34) STRANDED TOPCOATED
INSULATION	P.V.C GRAY (LEAD FREE)

AGENCY

U.L. STYLE NO.	2651
TEMPERATURE RATING	-20°C TO 105°C
VOLTAGE RATING	300V.MAX.
FLAMMABILITY RATING	VW-1

ELECTRICAL

CONDUCTOR RESISTANCE (D.C.)	43m. OHMS/FT. MAX.
CHARACTERISTIC IMPEDANCE	145 OHMS NOM. (GS) 123 OHMS NOM. (GSG)
CAPACITANCE	5.6 pF/FT. NOM. (GS) 10.3 pF/FT. NOM. (GSG)
PROPAGATION DELAY	1.4 ns/FT. NOM.
INSULATION RESISTANCE	10M OHMS (10FT. SAMPLE)
DIELECTRIC WITHSTAND VOLTAGE	2000 VRMS/MINUTE

GENERAL

B_3 NON-OPERATING TEMPERATURE	-20°C TO 105°C
FAULTS AND/OR SPLICES	1/REEL MAX. 100^{+3}_{-0}FT. ($30.48^{+0.914}_{-0}$ M.)/REEL 20FT. (6.096M.) MIN. LENGTH

B_2 SOLDERING CONDITION

SOLDER TEMPERATURE	260°C. MAX.
SOLDERING TIME	3 SECOND, MAX.
INSULATION SHRINK	2MM. NOM.

SEE CHANGE DETAIL
EC NO: THL2008-0015
DR'WN:CPANSAKHOM 2007/11/28
CH'KD:DNARINTARA 2007/11/29
APPR:SVIRATJAPOL 2007/12/04
DESCRIPTION
B
REV

QUALITY SYMBOLS
▼ =
Ⓒ =

GENERAL TOLERANCES (UNLESS SPECIFIED)

	mm	INCH
4 PLACES	± ---	± ---
3 PLACES	± ---	± ---
2 PLACES	± ---	± ---
1 PLACE	± ---	± ---
ANGULAR ±---°		

DRAFT WHERE APPLICABLE MUST REMAIN WITHIN DIMENSIONS

DIMENSION STYLE: MM/IN
SCALE: NTS
DESIGN UNITS: INCH
THIRD ANGLE PROJECTION

DRAWN BY: CPANSAKHOM DATE: 2006/07/18
CHECKED BY: PMEECHAI DATE: 2006/07/18
APPROVED BY: SVIRATJAPOL DATE: 2006/07/18

TITLE: FCB ROUND CONDUCTOR 2.54MM(.100)CENTER PVC. 26AWG STRANDED TOPCOATED

molex MOLEX INCORPORATED

MATERIAL NO.: SEE CHART
DOCUMENT NO.: SD-8996-001
SHEET NO.: 2 OF 3

SIZE: A4

THIS DRAWING CONTAINS INFORMATION THAT IS PROPRIETARY TO MOLEX INCORPORATED AND SHOULD NOT BE USED WITHOUT WRITTEN PERMISSION

CHART A				
DIMENSIONS MM. (INCHES)				
ENGINEERING NO.	ORDER NO.	NO. OF CONDUCTOR	DIMENSION S	DIM. W (REF.)
8996-02-100B	82-26-5802	2	2.54±0.127 (.100±.005)	5.08 (.200)
-03-	03	3	5.08±0.20 (.200±.008)	7.62 (.300)
-04-	04	4	7.62±0.30 (.300±.012)	10.16 (.400)
-05-	05	5	10.16±0.33 (.400±.013)	12.70 (.500)
-06-	06	6	12.70±0.33 (.500±.013)	15.24 (.600)
-07-	07	7	15.24±0.33 (.600±.013)	17.78 (.700)
-08-	08	8	17.78±0.33 (.700±.013)	20.32 (.800)
-09-	09	9	20.32±0.33 (.800±.013)	22.86 (.900)
-10-	10	10	22.86±0.33 (.900±.013)	25.40 (1.000)
-11-	11	11	25.40±0.33 (1.000±.013)	27.94 (1.100)
-12-	12	12	27.94±0.33 (1.100±.013)	30.48 (1.200)
-13-	13	13	30.48±0.33 (1.200±.013)	33.02 (1.300)
-14-	14	14	33.02±0.33 (1.300±.013)	35.56 (1.400)
-15-	15	15	35.56±0.33 (1.400±.013)	38.10 (1.500)
-16-	16	16	38.10±0.33 (1.500±.013)	40.64 (1.600)
-17-	17	17	40.64±0.33 (1.600±.013)	43.18 (1.700)
-18-	18	18	43.18±0.33 (1.700±.013)	45.72 (1.800)
-19-	19	19	45.72±0.33 (1.800±.013)	48.26 (1.900)
8996-20-100B	82-26-5820	20	48.26±0.33 (1.900±.013)	50.80 (2.000)

ENGINEERING NO.

8996-XX-XXXX
A B C D

A : CABLE 2.54mm. (.100") CENTERS 26AWG STRANDED TOPCOATED
B : CONDUCTOR SIZE (AVAILABILITY 2 THROUGH 20)
C : CABLE LENGTH 100FT. (30.48M.)
D : A = INCHES
B = FEET

SEE CHANGE DETAIL
EC NO: THL2008-0015
DRWN:CPANSAKHOM 2007/11/28
CH'KD:DNARINTARA 2007/11/29
APPR:SVIRATJAPOL 2007/12/04
DESCRIPTION
B
REV

QUALITY SYMBOLS
▼ =
Ⓒ =

GENERAL TOLERANCES (UNLESS SPECIFIED)

	mm	INCH
4 PLACES	± ---	± ---
3 PLACES	± ---	± ---
2 PLACES	± ---	± ---
1 PLACE	± ---	± ---
ANGULAR ±---°		

DRAFT WHERE APPLICABLE MUST REMAIN WITHIN DIMENSIONS

DIMENSION STYLE: MM/IN
SCALE: NTS
DESIGN UNITS: INCH
THIRD ANGLE PROJECTION

DRAWN BY: CPANSAKHOM DATE: 2006/07/18
CHECKED BY: PMEECHAI DATE: 2006/07/18
APPROVED BY: SVIRATJAPOL DATE: 2006/07/18
MATERIAL NO.: SEE CHART

TITLE: FCB ROUND CONDUCTOR 2.54MM(.100)CENTER PVC. 26AWG STRANDED TOPCOATED
MOLEX INCORPORATED
DOCUMENT NO.: SD-8996-001
SHEET NO.: 3 OF 3
SIZE: A4

THIS DRAWING CONTAINS INFORMATION THAT IS PROPRIETARY TO MOLEX INCORPORATED AND SHOULD NOT BE USED WITHOUT WRITTEN PERMISSION