molex
one company > a world of innovation

This document was generated on 03/26/2010

PLEASE CHECK WWW.MOLEX.COM FOR LATEST PART INFORMATION

Part Number: 0082226105

Status: Active

Description: 2.54mm (.100") Pitch Round Conductor Flat Cable - 22 AWG (7 x 30) Stranded, Tinned, 5 Circuits, Reel 30.48m (100.0') Length

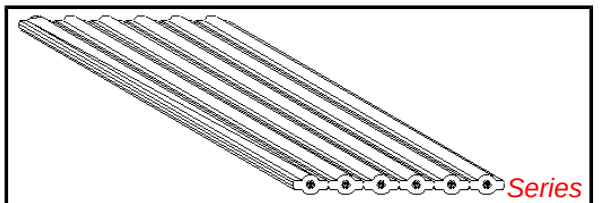

image - Reference only

Documents:
Drawing (PDF)
RoHS Certificate of Compliance (PDF)

Agency Certification

CSA	LR61126
UL	E61522

General

Product Family	Cable
Series	7560
Crimp Quality Equipment	Yes
Geographic Area	Asia
Product Name	Ribbon

Physical

Cable Length	30.48m (100.0')
Circuits (Loaded)	5
Insulation	PVC
Packaging Type	Reel
Pitch - Term. Interface (in)	0.100 In
Pitch - Term. Interface (mm)	2.54 mm
Temperature Range - Operating	-20°C to +105°C
Wire Size AWG	22
Wire/Cable Type	(7x30) Stranded, Tinned

Electrical

Current - Maximum per Contact	N/A
Voltage - Maximum	300V

Material Info

Old Part Number	7560-05-100B

Reference - Drawing Numbers

Sales Drawing	SD-7560-001

EU RoHS
ELV and RoHS Compliant
REACH SVHC
Not Reviewed
Halogen-Free Status
Not Reviewed

China RoHS

Need more information on product environmental compliance?

Email productcompliance@molex.com
For a multiple part number RoHS Certificate of Compliance, click here

Please visit the Contact Us section for any non-product compliance questions.

Search Parts in this Series
7560Series

Use With
70400 C-Grid SL™ IDT Connector Assembly. 70475 SL™ IDT Connector Assembly. 7720 KK® IDT Double Cantilever Contact

This document was generated on 03/26/2010

PLEASE CHECK WWW.MOLEX.COM FOR LATEST PART INFORMATION

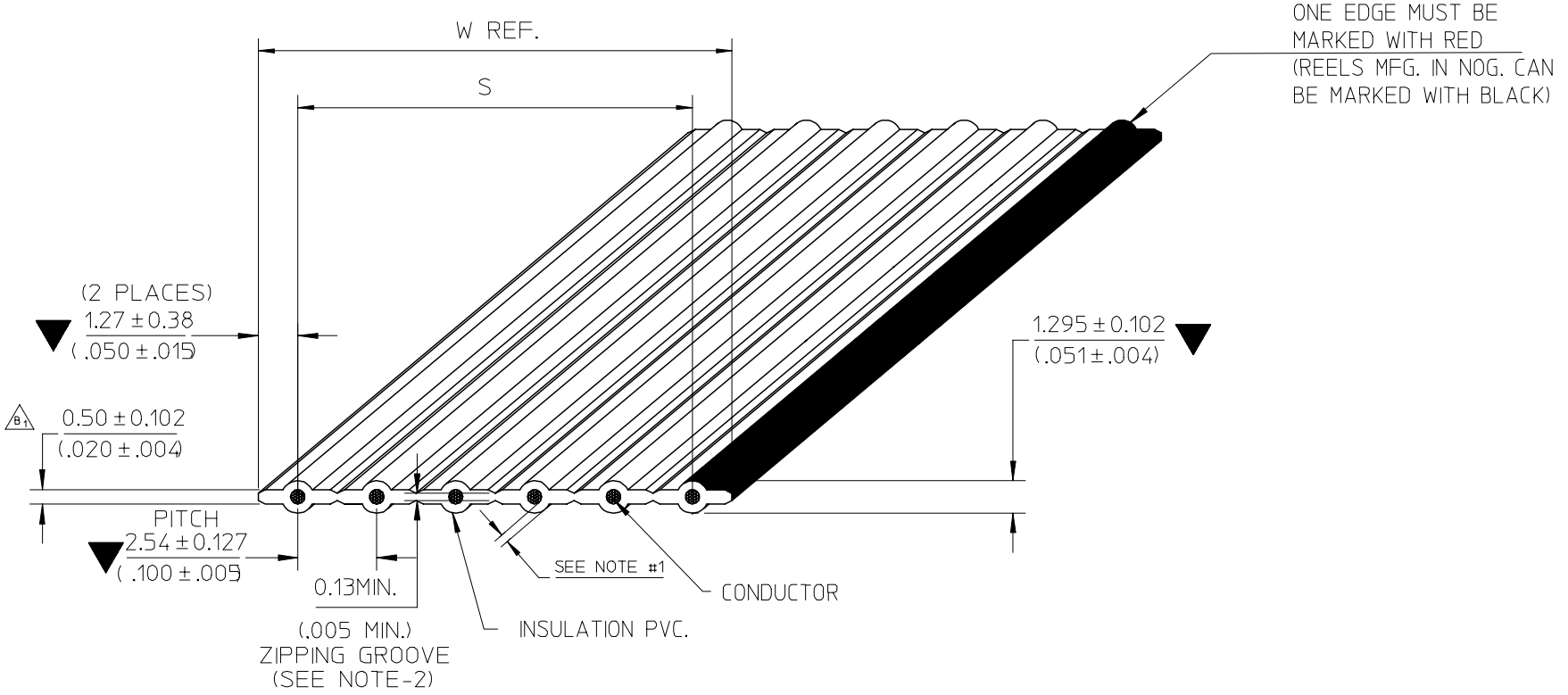

NOTE :
1. THE CABLE SHALL HAVE A MINIMUM OF 0.178mm. (.007") THICKNESS INSULATION AT ANY POINT
2. RIP TEST:
   - THE 0.13mm. (.005") ZIPPING GROOVE SHALL BE CAPABLE OF BEING RIPPED BY HAND WITHIN THE RECESS,WITHOUT EXPOSING THE ADJACENT CONDUCTORS
3. RoHS AND LEAD FREE COMPLIANT
4. SPECIAL REQUIREMENT: N/A

REV. HISTORY	EC NO.	DETAIL	DATE
B	E-07-0748	B_2: ADD NON-OPERATING TEMP, B_1: CHANGE WEB THICKNESS	07/09/26
A	N/A	NEW RELEASE	06/07/18

SEE CHANGE DETAIL
EC NO: THL2008-0015
DRWN:CPANSAKHOM 2007/11/28
CH'KD:DNARINTARA 2007/11/29
APPR:SVIRATJAPOL 2007/12/04
DESCRIPTION
B
REV

QUALITY SYMBOLS
▼=3
▽=0

GENERAL TOLERANCES (UNLESS SPECIFIED)

	mm	INCH
4 PLACES	± ---	± ---
3 PLACES	± ---	± ---
2 PLACES	± ---	± ---
1 PLACE	± ---	± ---
ANGULAR ±---°		

DRAFT WHERE APPLICABLE MUST REMAIN WITHIN DIMENSIONS

DIMENSION STYLE	SCALE	DESIGN UNITS	THIRD ANGLE PROJECTION
MM/IN	NTS	INCH	

DRAWN BY / DATE	CPANSAKHOM 2006/07/18
CHECKED BY / DATE	PMEECHAI 2006/07/18
APPROVED BY / DATE	SVIRATJAPOL 2006/07/18
MATERIAL NO.	SEE CHART
TITLE	FCB ROUND CONDUCTOR 2.54MM(.100)CENTER PVC. 22AWG STRANDED TINNED
	MOLEX INCORPORATED
DOCUMENT NO.	SD-7560-001
SHEET NO.	1 OF 3
SIZE	A4

THIS DRAWING CONTAINS INFORMATION THAT IS PROPRIETARY TO MOLEX INCORPORATED AND SHOULD NOT BE USED WITHOUT WRITTEN PERMISSION

SPECIFICATIONS

PHYSICAL

CONDUCTOR SPACING	2.54(.100") ℄ TO ℄
WIRE GAUGE	22 AWG(7/30) STRANDED TINNED
INSULATION	P.V.C GRAY (LEAD FREE)

AGENCY

U.L. STYLE NO.	2651
TEMPERATURE RATING	-20°C TO 105°C
VOLTAGE RATING	300V.MAX.
FLAMMABILITY RATING	VW-1

ELECTRICAL

CONDUCTOR RESISTANCE (D.C.)	17 m OHMS/FT. MAX.
CHARACTERISTIC IMPEDANCE	128 OHMS NOM. (GS) 104 OHMS NOM. (GSG)
CAPACITANCE	7.2 pF/FT. NOM. (GS) 13.4 pF/FT. NOM. (GSG)
PROPAGATION DELAY	1.4 ns/FT. NOM.
INSULATION RESISTANCE	10 M OHMS (10FT. SAMPLE)
DIELECTRIC WITHSTAND VOLTAGE	2000 VRMS/MINUTE

GENERAL

B_2 NON-OPERATING TEMPERATURE	-20°C TO 105°C
FAULTS AND/OR SPLICES	1/REEL MAX. 100^{+3}_{-0}FT. ($30.48^{+0.914}_{-0}$ M.)/REEL 20FT. (6.096M.) MIN. LENGTH

SEE CHANGE DETAIL
EC NO: THL2008-0015
DRWN:CPANSAKHOM 2007/11/28
CH'KD:DNARINTARA 2007/11/29
APPR:SVIRATJAPOL 2007/12/04
DESCRIPTION
B
REV

QUALITY SYMBOLS
▼ =
Ⓒ =

GENERAL TOLERANCES (UNLESS SPECIFIED)

	mm	INCH
4 PLACES	± ---	± ---
3 PLACES	± ---	± ---
2 PLACES	± ---	± ---
1 PLACE	± ---	± ---
ANGULAR ±---°		

DRAFT WHERE APPLICABLE MUST REMAIN WITHIN DIMENSIONS

DIMENSION STYLE: MM/IN
SCALE: NTS
DESIGN UNITS: INCH
THIRD ANGLE PROJECTION

DRAWN BY	CPANSAKHOM	DATE 2006/07/18
CHECKED BY	PMEECHAI	DATE 2006/07/18
APPROVED BY	SVIRATJAPOL	DATE 2006/07/18

TITLE: FCB ROUND CONDUCTOR 2.54MM(.100)CENTER PVC. 22AWG STRANDED TINNED

molex MOLEX INCORPORATED

MATERIAL NO.: SEE CHART
DOCUMENT NO.: SD-7560-001
SHEET NO.: 2 OF 3

SIZE A4

THIS DRAWING CONTAINS INFORMATION THAT IS PROPRIETARY TO MOLEX INCORPORATED AND SHOULD NOT BE USED WITHOUT WRITTEN PERMISSION

CHART A DIMENSIONS MM. (INCHES)				SHIPPED ON 100FT. REELS	
ENG. NO.	NO.OF COND.	DIMENSION S	DIM. W (REF)	ENGINEERING NO.	ORDER NO.
7560-02	2	2.54±0.127 (.100±.005)	5.08 (.200)	7560-02-100B	82-22-6102
7560-03	3	5.08±0.20 (.200±.008)	7.62 (.300)	7560-03-100B	82-22-6103
7560-04	4	7.62±0.30 (.300±.012)	10.16 (.400)	7560-04-100B	82-22-6104
7560-05	5	10.16±0.33 (.400±.013)	12.70 (.500)	7560-05-100B	82-22-6105
7560-06	6	12.70±0.33 (.500±.013)	15.24 (.600)	7560-06-100B	82-22-6106
7560-07	7	15.24±0.33 (.600±.013)	17.78 (.700)	7560-07-100B	82-22-6107
7560-08	8	17.78±0.33 (.700±.013)	20.32 (.800)	7560-08-100B	82-22-6108
7560-09	9	20.32±0.33 (.800±.013)	22.86 (.900)	7560-09-100B	82-22-6109
7560-10	10	22.86±0.33 (.900±.013)	25.40 (1.000)	7560-10-100B	82-22-6110
7560-11	11	25.40±0.33 (1.000±.013)	27.94 (1.100)	7560-11-100B	82-22-6111
7560-12	12	27.94±0.33 (1.100±.013)	30.48 (1.200)	7560-12-100B	82-22-6112
7560-13	13	30.48±0.33 (1.200±.013)	33.02 (1.300)	7560-13-100B	82-22-6113
7560-14	14	33.02±0.33 (1.300±.013)	35.56 (1.400)	7560-14-100B	82-22-6114
7560-15	15	35.56±0.33 (1.400±.013)	38.10 (1.500)	7560-15-100B	82-22-6115
7560-16	16	38.10±0.33 (1.500±.013)	40.64 (1.600)	7560-16-100B	82-22-6116
7560-17	17	40.64±0.33 (1.600±.013)	43.18 (1.700)	7560-17-100B	82-22-6117
7560-18	18	43.18±0.33 (1.700±.013)	45.72 (1.800)	7560-18-100B	82-22-6118
7560-19	19	45.72±0.33 (1.800±.013)	48.26 (1.900)	7560-19-100B	82-22-6119
7560-20	20	48.26±0.33 (1.900±.013)	50.80 (2.000)	7560-20-100B	82-22-6120

ENGINEERING NO.

$$\frac{7560}{A}-\frac{XX}{B}-\frac{XXXX}{C}\,\frac{}{D}$$

A : CABLE 2.54mm. (.100") CENTERS 22 AWG STRANDED TINNED

B : CONDUCTOR SIZE (AVAILABILITY 2 THROUGH 20)

C : CABLE LENGTH 100FT. (30.48M.)

D : A = INCHES
B = FEET

SEE CHANGE DETAIL
EC NO: THL2008-0015
DRWN:CPANSAKHOM 2007/11/28
CH'KD:DNARINTARA 2007/11/29
APPR:SVIRATJAPOL 2007/12/04
DESCRIPTION
B
REV

QUALITY SYMBOLS
▼ =
▽C =

GENERAL TOLERANCES (UNLESS SPECIFIED)

	mm	INCH
4 PLACES	± ---	± ---
3 PLACES	± ---	± ---
2 PLACES	± ---	± ---
1 PLACE	± ---	± ---
ANGULAR ±---°		

DRAFT WHERE APPLICABLE MUST REMAIN WITHIN DIMENSIONS

DIMENSION STYLE: MM/IN
SCALE: NTS
DESIGN UNITS: INCH
THIRD ANGLE PROJECTION

DRAWN BY: CPANSAKHOM DATE: 2006/07/18
CHECKED BY: PMEECHAI DATE: 2006/07/18
APPROVED BY: SVIRATJAPOL DATE: 2006/07/18

TITLE: FCB ROUND CONDUCTOR 2.54MM(.100)CENTER PVC. 22AWG STRANDED TINNED

MOLEX INCORPORATED

MATERIAL NO.: SEE CHART
DOCUMENT NO.: SD-7560-001
SHEET NO.: 3 OF 3

SIZE A4

THIS DRAWING CONTAINS INFORMATION THAT IS PROPRIETARY TO MOLEX INCORPORATED AND SHOULD NOT BE USED WITHOUT WRITTEN PERMISSION